NJITSU MOTION

(Powerful Precision Motion to Drive a **Greener Future**)

Overview

Transformation of Manufacturing to Sustainable & Greener Future

Made in India

***Italian* Design**

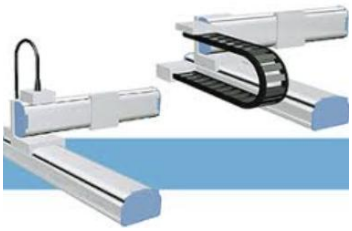

(www.njitsu.in)

NJITSU MOTION

(Powerful Precision Motion to Drive a **Greener Future**)

Credentials

Unit-4
Green Field Facility-Mfg
(Electrical Cylinders | Robot | Multi Axis System)

2025

Unit-3
(Tech Top Notch Services)
"MES | SCADA | Logic | AI | Software

2021

Unit-2
Multi Axis | Robots| Sales & Services

2020

Accreditation : D&B Global Rating – 8/10

Unit-1
(Trunkey Solution)

2017

Accreditation : QMS- ISO 9001

INR 400 Mn
60,000 Sqft
PAN India | Europe | Latin Africa | USA

INR 250 Mn
30,000 Sqft
PAN India | Europe | Latin Africa

INR 120 Mn
20,000 Sqft
PAN India | Latin Africa

INR 35 Mn
10,000 Sqft
PAN India

Establishment Year-2017

NJITSU MOTION

(Powerful Precision Motion to Drive a **Greener Future**)

Electric Build-in Guideway Servo Actuator

- Lightweight aluminum alloy material
- Reduced size by 45%
- Balls roll on the guide groove by gothic arc four-point contact
- Nut and sliding block are integrated into one piece
- Dust-proof actuators use in cleanroom and dust-free production line
- Transmission mode:
  1.Ball screw 2.PU steel belt 3.Linear motor module

UT-SERVO™
CLOSED LOOP STEPPING SYSTEM

AU Series-ALL IN ONE

NEW LAUNCH
ISO : 9001:2015

Ball Screw

Belt

AU-L -Standard ball screw servo actuator

AU-H -Standard ball screw servo actuator

AUS-Cleanroom ball screw servo actuator

AUT-Standard belt servo Actuator

AUTS-Cleanroom belt servo actuator

UT-Servo drive control

Three different control modes

- Position
- Torque
- Suppression

UT-SERVO is the best drive control 16000 ppr encoder

AU Series 45 • 55 • 65 • 88

Selection conditions	Product introduction	Page
• Single-axis use or multi-axis combined use. • Load eccentric position Ma, Mb, Mc. • Installed direction : horizontal, vertical, wall mounted, upside down. • Effective stroke • Use environment : general place, high pollution and clean room. • Positioning accuracy, repeatability, parallelism, plane accuracy. • Drive system : AC servo motor / DC stepping motor. Select appropriate motor output torque. • Accessories : motor mount, coupling, sensors and sheet metal parts, cable chain. • Ratio of AUT & AUTS Gear ratio: 2, 3, 4, 5, 6, 7, 8, 9, 10, 12, 15, 20	AU-L Ball screw No-covered type / Standard 	P22~50
	AU-H Ball screw Covered type / Standard 	
	AUS Ball screw Cleanroom 	P51~64
	AUT Belt Standard 	P65~69
	AUTS Belt Cleanroom 	P70~74

AU series actuators can fit with stepping motor and servo motor.

AC Serco motor

MITSUBISHI YASKAWA PANASONIC

DC Stepping motor

UT-Servo DC-24V/48V

P75~85

DZ series Hollow Rotating Platform

DZ62 DZ85 DZ130 DZ200/DZ275

P86~88

AU, AUS Series Combined application

X+θ

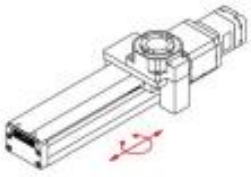

XZW orthogonal

XYS cantilever type

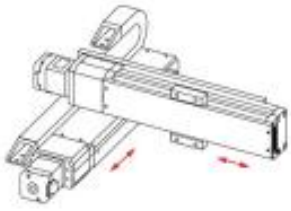

XYZS cantilever type

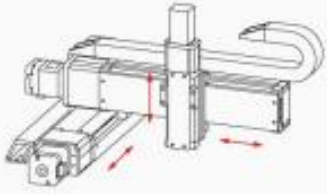

XYG gantry type

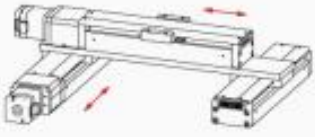

XYZG+ θ gantry type

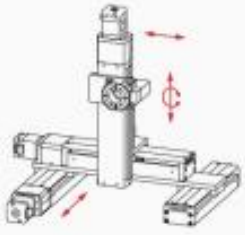

XYZV vertical type

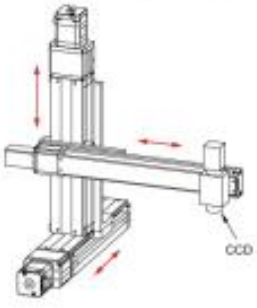

2YBG long-span YY-axis ball screw combination

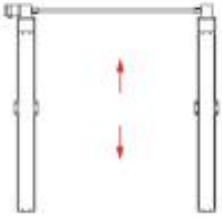

2YTG long-span YY-axis belt combination

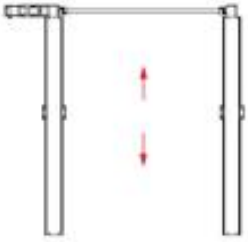

θ-DZ series
Hollow
Rotating
Platform

UT-Servo
closed loop
stepping system

AU, AUS Series

Product description

Innovative research and development of AU single axis robot-linear positioning actuator module-is based on accumulated years of manufacturing and assembly experience and industry-university technology exchanges.
The main core of the AU series design is integrating the ball screw, nut, sliding block, and the linear guide rails, which has the characteristics of high rigidity and high load-bearing, and suppresses high-speed vibration.
AU series has a complete range of specifications, it is convenient to fix of locking up and down, and can be used in single axis or combination of multi-axis.
Application: various industries of automatic transmission, glue dispensing, positioning, measurement, inspection, and cutting equipment application.

Design Features

- Lightweight aluminum alloy material
- Reduced size by 45%
- Balls roll on the guide groove by gothic arc four-point contact
- Nut and sliding block are integrated into one piece
- Dust-proof actuators use in cleanroom and dust-free production line
- Transmission mode:
  1.Ball screw 2.PU steel belt 3.Linear motor module

Product structure

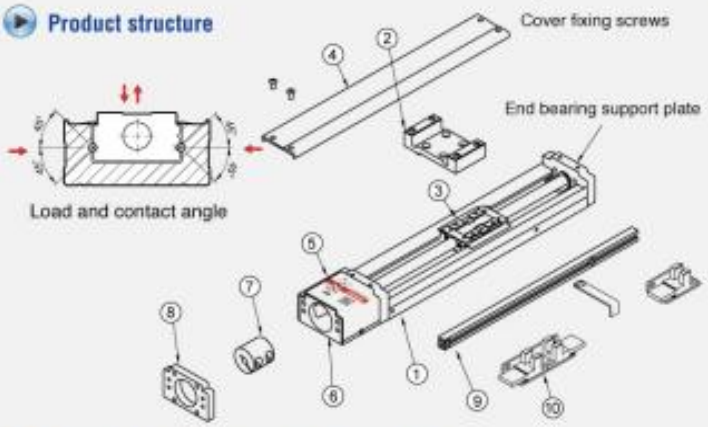

① Body
② Carrier: used with the top cover to load
③ Integrated nut and sliding block
④ Top cover: Prevent foreign matter and dust from entering
⑤ Brand identity plate
⑥ Motor mount
⑦ Coupling
⑧ Motor flange: various motor flange surface fixing plates
⑨ Sensor fixing rail: to fix limited switches
⑩ Sensor : Home, +Ls, -Ls

Gothic Arc Four-point Contact guide Rail

U-shaped bodies are mounted hardened guide rails on both sides, and the steel balls roll on the guide groove with a 45° Gothic arc four-point contact angle, so that the rated load of the slide block is evenly applied to the four equal directions. Then the cyclical motion of the steel balls in the slide block (nut) is converted into a linear motion transmission mechanical element, which has the characteristics of high positioning accuracy, high load-bearing life and high-speed forward and reverse transmission. Compared with general circular arc guide rail. the Gothic arc guide rail effectively reduces the friction and loss of the steel ball surface and reduces the noise.
Suitable for multiple installation ways, including horizontal, wall-mounted, vertical, and upside down.

Circular arc guide rail

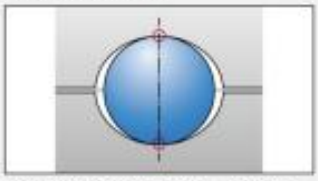

The circular-arc raceway has two running tracks with conformity. This produces a 2-point contact between the running tracks and the rolling element.

Gothic arc guide rail

In Gothic-arch raceways, the Gothic profile (derived from the pointed arch, a stylistic element in Gothic architecture) produces two running tracks with conformity per side.This results in 4-point contact with the rolling element.

Contact stress and load

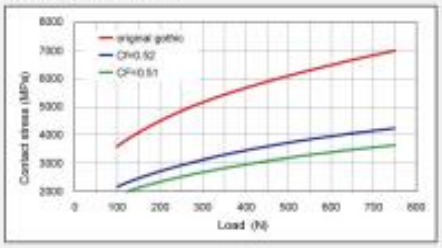

Save space

AU series actuators greatly reduce the volume, which can save the space of the equipment as well as the costs. A variety of options for single and multi-axis actuators meets customer's use conditions.

Unit : mm

Model No.	W	H
AU-45	45	20
AU-55	55	28
AU-65	65	33
AU-88	88	47

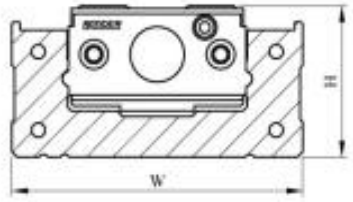

Ragid distribution

AU series actuators adopt U-shaped body, the structure rigidity and load distribution of the sections Ix and Iy are balanced to enhance the stress moment and torsion moment. AU series have the characteristics of small size and large load.

Unit : mm⁴

Model No.	Ix (mm⁴)	Iy (mm⁴)
AU-45	1.0640×10^4	1.1125×10^5
AU-55	3.0857×10^4	2.6159×10^5
AU-65	7.6311×10^4	5.3812×10^5
AU-88	2.6488×10^5	1.7976×10^6

Ix = X-axis geometric surface moment

Iy = Y-axis geometric surface moment

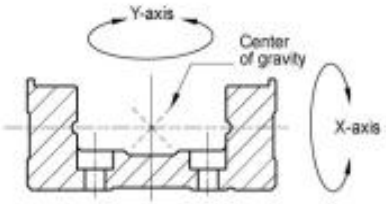

Section I Svalue

AU series actuators have a low center of gravity for optimal resistance to torsion and bending

Torque performance

Three load directions : Static allowable load moment Ma、Mb、Mc.

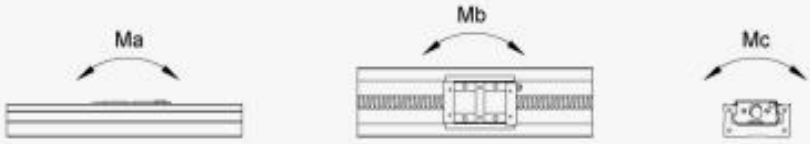

Standard four-hole single sliding block A

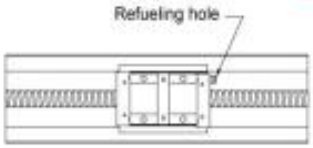

Standard four-hole two sliding blocks B

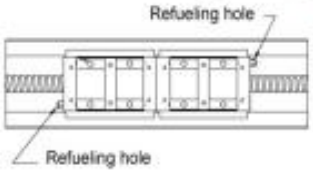

Light-load two-hole single sliding block C

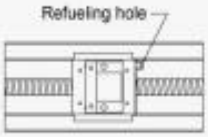

Light-load two-hole two sliding blocks D

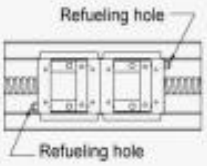

A、B、C、D four type load data analysis

Model No.	Sliding block	Rated dynamic load(N)	Rated static load(N)	Static allowable load moment (N•m)		
				Ma	Mb	Mc
AU-45	4-Hole 1 sliding block-A	6782	10877	75	75	134
AU-45	4-Hole 2 sliding blocks-B			338	338	286
AU-55	4-Hole 1 sliding block-A	11250	18033	162	162	286
AU-55	4-Hole 2 sliding blocks-B			763	763	572
AU-65	4 Hole 1 sliding block-A	15353	24064	243	243	481
AU-65	4-Hole 2 sliding blocks-B			1186	1186	962
AU-65	2-Hole 1 sliding block-C	9960	12942	81	81	257
AU-65	2-Hole 2 sliding blocks-D			432	432	514
AU-88	4-Hole 1 sliding block-A	22031	35330	514	514	1045
AU-88	4-Hole 2 sliding blocks-B			2471	2471	2090
AU-88	2-Hole 1 sliding block-C	12816	20478	143	143	558
AU-88	2-Hole 2 sliding blocks-D			828	828	1116

Choose B or D type, The 2 sliding blocks can be close or be apart. The moment increases when the 2 sliding blocks separate. However, it should be noted that the stroke(travel) is shortened, please refer to the cataloge for the maximum stroke data.

Ball screw load data analysis

Model No.	Pitch (lead) (mm)	Shaft diameter (mm)	Rated dynamic load(kN)	Rated static load(kN)
AU-45	1	Ø8	0.48	1.945
	2.5		0.26	0.457
AU-55	2	Ø10	2.05	3.48
	5		4.2	6.1
	10		4.3	6.25
AU-65	5	Ø12	2.99	5.4
	10		2.02	4.59
AU-88	5	Ø15	4.4	8.32
	10		4.4	8.32
	20		2.84	5.27

1.Positioning accuracy：C level ±0.02mm // P level ±0.01mm
2.Repeatability：C level ±0.008mm // P level ±0.003mm

The ball screw accuracy has C level and P level, the following table

Unit : mm

Model No.	Stroke (Travel)	Track length	Positioning accuracy (mm)		Repeatability (mm)		Parallelism (mm)		Interval (mm)		Starting torque (N•Cm)	
			C level	P level	C level	P level	C level	P level	C level	P level	C level	P level
AU-45	42	100	±0.02	±0.01	±0.008	±0.003	0.03	0.015	0.01	0.003	0.8	1.2
	92	150										
	142	200										
AU-55	73	150	±0.02	±0.01	±0.008	±0.003	0.03	0.015	0.01	0.003	1.8	4
	123	200										
	173	250										
	223	300										
AU-65	60	150	±0.02	±0.012	±0.008	±0.003	0.03	0.015	0.02	0.003	7	15
	110	200										
	210	300										
	310	400										
	410	500					0.04	0.02				
	510	600										
AU-88	222	340	±0.02	±0.012	±0.008	±0.003	0.04	0.02	0.02	0.003	10	15
	322	440										
	422	540										
	522	640										
	622	740		±0.015			0.05	0.03				17
	722	840										
	822	940					0.06	0.045				25

UT Servo

AU-L

AU-LS

AU-H

AU-HS

AU Series

L : No-covered type
LS : No-covered type / Light load
H : Covered type
HS : Covered type / Light load

Stroke & Max. rotating speed

Select the appropriate ball screw lead and motor speed to achieve the best use conditions.

Unit : mm

Model No.	Outer diameter of the ball screw	Lead	Track length	Effective stroke	C level max. rotating speed (mm/sec)	P level max. rotating speed (mm/sec)
AU-45	Ø8 mm	1 mm	100	42	60	72
			150	92		
			200	142		
		2.5 mm	100	42	150	180
			150	92		
			200	142		
AU-55	Ø10 mm	2 mm	150	73	120	145
			200	123		
			250	173		
			300	223		
		5 mm	150	73	290	350
			200	123		
			250	173		
			300	223		
		10 mm	150	73	580	700
			200	123		
			250	173		
			300	223		
AU-65	Ø12 mm	5 mm	150	60	290	350
			200	110		
			300	210		
			400	310		
			500	410		
			600	510		
		10 mm	150	60	580	700
			200	110		
			300	210		
			400	310		
			500	410		
			600	510		
		20 mm	150	60	1000	1200
			200	110		
			300	210		
			400	310		
			500	410		
			600	510		

Stroke & Max. rotating speed

Unit : mm

Model No.	Outer diameter of the ball screw	Lead	Track length	Effective stroke	C level max. rotating speed (mm/sec)	P level max. rotating speed (mm/sec)
AU-88	Ø16mm	5 mm	340	222	290	350
			440	322		
			540	422		
			640	522		
			740	622		
			840	722		
			940	822		
		10 mm	340	222	580	700
			440	322		
			540	422		
			640	522		
			740	622		
			840	722		
			940	822		
		20 mm	340	222	1000	1200
			440	322		
			540	422		
			640	522		
			740	622		
			840	722		
			940	822		

AU/AUS series acceleration

Lead	≦2.5mm	5mm	10mm	20mm
acceleration	0.1G	0.15G	0.25G	0.3G

Line speed =motor speed x Pitch÷ 60 (sec) $V\ (\text{mm/sec}) = S \times P \div 60$

DN value The DN value represents the revolution speed of the steel balls and is used to evaluate the high speed of the ball screw. When the revolution speed of the steel balls increases, the impact force will damage the circulating parts. Therefore, the allowable revolution speed is limited by the DN value composed of the center diameter of the steel balls and the rotational speed of the screw shaft.

Repeatability

Accuracy of 7 times of reciprocating motion in the stroke

Positioning Accuracy

The proximity of the entity's location information to it's true loction

Parallerism

Parallerism inspection of the AU actuators fixed on marble with a dial indicator

Interval

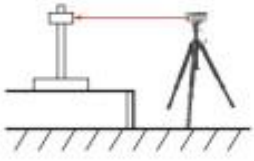

The higher the ball screw level the smaller the interval. Measure actual tolerances with a laser interferometer

Selection

1. Conditions

- Effective stroke
- Space limitation: length, width, height
- Installed direction: horizontal, vertical, wall mounted, upside down
- Load center of gravity
- Operating conditions: pitch, speed, acceleration, working hours
- Use environment: temperature, vibration oil pollution, corrosion

2. Accuracy

○ Positioning accuracy
○ Reapeatability
○ Parallerism

3. Application

○ Single axis ○ Multi-axis
○ Two-axis ○ Special combination

4. Motor type

○ AC servo motor
○ DC stepping motor
○ with or without brake

5. Motor load calculation

○ Max. speed
○ Max. resolution
○ Motor torque

6. Operation analysis

○ Acceleration ○ Actual operation mode

7. Accessories

○ Motor mount, sensors, cable chain

4. Order confirmation

○ Conditions of use ○ Additional processing
○ Price & lead time ○ Other requirements

The following is **AU products** characteristics for preliminary selection reference.

AU category	**AU**	**AUS**	**AUT**	**AUTS**
Accuracy	High		General	
Load	High, Medium and low			
Speed	High	High	Higher	Higher
Customized	Allowable			
Rigidity	Aluminum alloy base			
Cover type	Aluminum alloy cover	Stainless steel belt	Aluminum alloy cover	Stainless steel belt
Cleanliness	General	Good	General	Good
Dustproof	General	Good	General	Good
Drive mode	Ball screw		Belt	
Motor connected direction	Motor connected directly / below / right / left		Motor connected right / left	
Locking method	Uplock	Uplock & downlock	Uplock	Uplock & downlock

Sensor circuit diagram

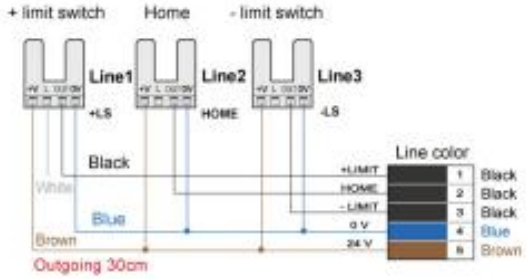

EE-SX674

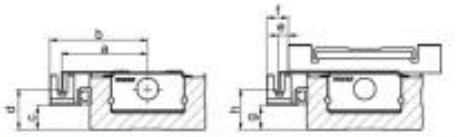

Model No.	a	b	c	d	e	f	g	h
AU-45	42	48.5	0.5	9.7	15.5	22.5	0.5	9.7
AU-55	46.3	54.2	6.5	16	21	35	6.5	16
AU-65	51.5	58	13.5	23	8.5	15	13.5	23
AU-88	63.5	69.5	26	36	7	13.5	26	36

EE-SX671

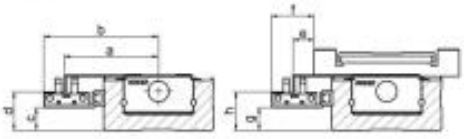

Model No.	a	b	c	d	e	f	g	h
AU-45	49	61.5	0.5	9.7	23	28.7	0.5	9.7
AU-55	52.8	66	6.5	18	15.5	22	6.5	18
AU-65	58	71	13.5	23	15	28	13.5	23
AU-88	69.5	82.5	26	36	13.5	26.5	26	36

GX-F12A · GX-F12A-P

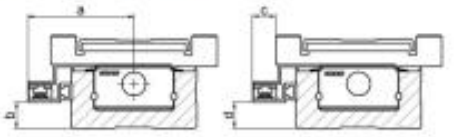

Model No.	a	b	c	d
AU-45	47.5	0.5	22.5	0.5
AU-55	53.2	6.5	21	6.5
AU-65	57	13.5	15	13.5
AU-88	68.5	26	13.5	26

Service life calculation

AU acauators consist of guide rails, ball screw, and bearing. Fatigue loss of steel balls is caused by rolling back and forth and loading. The rated service life of AU actuators is defined as the total travel length reached by the actuator which is used to the critical point. The service life is also closely related to the maintenance method.

Guide rails

$$L = \left(\frac{fc}{fw} \times \frac{C}{Pc}\right)^3 \times 50\ Km$$

L : Rated service life (Km)
fc : Contact coefficient (Reference form 1)
fw : Load coefficient (Reference form 2)
C : Rated dynamic load (N)
Pc : Working load (N)

Guide rails service life

$$Lh = \frac{L \times 10^6}{2 \times ls \times N1 \times 60}$$

Lh : Service life (h)
ls : Travel length (mm)
N1 : Round trips per minute (min^{-1})

Ball screw and bearing housing

$$L = \left(\frac{1}{fw} \times \frac{Ca}{Pa}\right)^3 \times 10^6\ rev$$

L : Rated service life (Number of revolutions)
fw : Load coefficient (Reference form 2)
Ca : Rated dynamic load (N)
Pa : Axial load (N)

Ball screw support end service life

$$Lh = \frac{L \times P}{2 \times ls \times N1 \times 60}$$

Lh : Service life (h)
ls : Travel length (mm)
N1 : Round trips per minute (min^{-1})
P : Pitch (mm)

Form 1

Sliding block	Contact coefficient
A · C	1.00
B · D	0.81

Form 2

Working environment		
Load condition	Speed (V)	Load coefficient (Fw)
Smooth	Low V ≦ 15 m/min	1.0~1.5
General vibration	Medium V ≦ 60 m/min	1.5~2.0
High vibration	High V ≧ 60 m/min	2.0~3.5

AU-H dimension reference

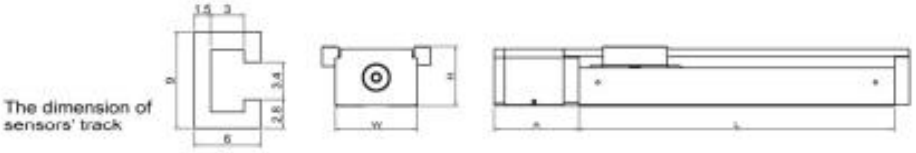

Unit：mm

Model No.	Stroke	L	A	H	W
AU45H	42	100	45	30	45
	92	150			
	142	200			
AU55H	73	150	48	41	55
	123	200			
	173	250			
	223	300			
AU65H	60	150	59	48	65
	110	200			
	210	300			

Model No.	Stroke	L	A	H	W
AU65H	310	400	59	48	65
	410	500			
	510	600			
AU88H	222	340	80	69	88
	322	440			
	422	540			
	522	640			
	622	740			
	722	840			
	822	940			

Maintenance precaution

To ensure the accuracy and smoothness of AU actuators, proper lubrication and maintenance are required. The steel ball is subjected to impact and load pressure during operation, its service life will be shortened due to rolling friction and heat loss under long-term use.

Regular proper lubrication and maintenance

*Reduce the loss of rolling friction of steel balls and cool down.
*Libricates the steel balls' contact area and forms an oil film for protection.
*It is recommended to inject oil regularly every month or every 100Km.

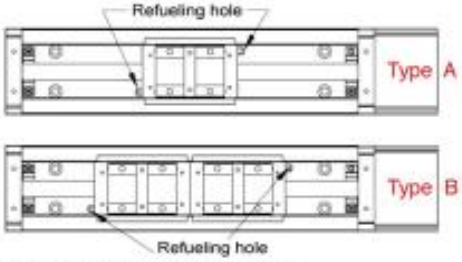

Diagram of lubrication position:
When oiling and maintaining the AU-H type actuator, please remove the fixing screws of the upper cover, put the oil gun at the refueling hole for oiling, and then restore the upper cover and tighten the screws.

Note 1: The test method conforms to **RENDER** standard.

Note 2: The starting torque is the data measured when using Speed-Max Grease lubricating oil. General lubricating oil cannot meet the harsh operating requirements of the industry. It must be injected more often, or lead to insufficient lubrication, excessive noise,and carbon stuck. Speed-Max Grease type S2 is for high adhesion lubrication,modulated for the required characteristic of the transmission element.

1.Temperature:-20°C~+200°C
2.Type S2 reaches dust-free 10000 grade.
3.Can withstand DN value of 300,000 when operating at high speed.
4.With reduced noise, high adhesion.
5.With excellent extreme pressure, heavy load capacity.
6.With high sealing ability.
7.With the ability to protect metals against corrosion.
8.With excellent anti-wear ability.
9.Has significant antioxidant effect abd coexist with metals, plastics and elastomers.
10.With NSF certification, can be used in food machinery.

Note 3: If a high viscosity grease is used, such as vacuum grease or clean room grease, the actual starting torque may exceed the corresponding value in the value.Special attention should be paid to this characteristic when selecting motors.

Motor flange code

Render provides the corresponding AU series motor flanges for various brands of motors, and numbers each flange.Customers can prepare the motor flange according to the dimension of each drawing.

Only equipped with motor mount (Customers prepare the motor flange and the motor)

AU Model No.	The flange surface dimensions of the motor mount
AU-45	4500
AU-55	5500
AU-65	6500
AU-88	8800

MITSUBISHI Servo motor

Output power	Motor Model No.	AU-45	AU-55	AU-65	AU-88
50W	HF-KP053	4501	5501	6501	8801
	Coupling d1 x d2	5 x 8	6 x 8	10 x 8	10 x 8
100W	HF-KP13	4501	5501	6501	8801
	Coupling d1 x d2	5 x 8	6 x 8	10 x 8	10 x 8
200W	HF-KP23	-	-	-	8802
	Coupling d1 x d2	-	-	-	10 x 14
400W	HF-KP43	-	-	-	8802
	Coupling d1 x d2	-	-	-	10 x 14

Panasonic Servo motor

Output power	Motor Model No.	AU-45	AU-55	AU-65	AU-88
30W	MSMA3ACF	4502	5502	-	-
	Coupling d1 x d2	5 x 8	6 x 5	-	-
50W	MSMD05AZP1	4503	5503	6502	8803
	Coupling d1 x d2	5 x 8	6 x 8	10 x 8	10 x 8
100W	MSMD012AZP1	4503	5503	6502	8803
	Coupling d1 x d2	5 x 8	6 x 8	10 x 8	10 x 8
200W	MSMD022AZP1	-	-	-	8804
	Coupling d1 x d2	-	-	-	10 x 11
400W	MSMD042AZP1	-	-	-	8804
	Coupling d1 x d2	-	-	-	10 x 14

Motor flange code

YASKAWA Servo motor

Output power	Motor Model No.	AU-45	AU-55	AU-65	AU-88
50W	SGMAV-A5ADA61	4501	5501	6501	8801
	Coupling d1 x d2	5 x 8	6 x 8	10 x 8	10 x 8
100W	SGMAV-A5ADA64	4501	5501	6501	8801
	Coupling d1 x d2	5 x 8	6 x 8	10 x 8	10 x 8
200W	SGMAV-A5ADA65	-	-	-	8802
	Coupling d1 x d2	-	-	-	10 x 14
400W	SGMAV-A5ADA66	-	-	-	8802
	Coupling d1 x d2	-	-	-	10 x 14

UT-SERVO Closed loop stepping system

Motor frame	Motor Model No.	AU-45	AU-55	AU-65	AU-88
□28	STM28S100A	4504	5504	-	-
	Coupling d1 x d2	5 x 5	6 x 5	-	-
□35	STM35S100A	4505	5505	-	-
	Coupling d1 x d2	5 x 5	6 x 5	-	-
□42	STM42S100A	4506	5506	6503	-
	Coupling d1 x d2	5 x 6	6 x 5	6 x 5	-
□56	STM56S100A	-	-	6504	8805
	Coupling d1 x d2	-	-	6 x 8	10 x 8

Orientalmotor Stepping motor

Motor frame	Motor Model No.	AU-45	AU-55	AU-65	AU-88
□28	PKP223D15A2	4504	5504	-	-
	Coupling d1 x d2	5 x 5	6 x 5	-	-
□42	PK243-01A	4506	5506	6503	-
	Coupling d1 x d2	5 x 6	6 x 5	6 x 5	-
□56	PK264-02A	-	-	6504	8805
	Coupling d1 x d2	-	-	6 x 6.35	10 x 6.35
□60	PK564NAW	-	-	6505	8806
	Coupling d1 x d2	-	-	6 x 8	10 x 8

Motor adapter board fixing hole code

AU Model No.	Fixing hole code
AU-45	4507
AU-55	5507
AU-65	6507
AU-88	8807

Schematic of motor adapter board fixing hole

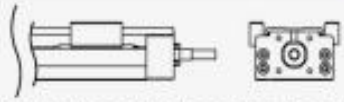

Without motor adapter board, synchronizing wheel and the gear cover

Motor flange code

AU-45 Series

4500

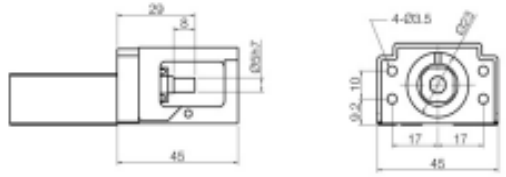

No motor and coupling

4501

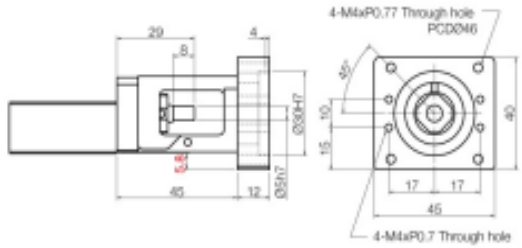

Mitsubishi / Yaskawa / Delta / Shihlin motor 50W+100W

4502

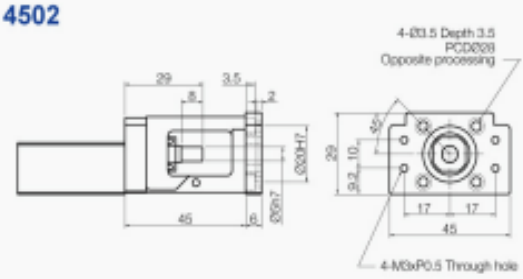

Panasonic Servo motor 30W

4503

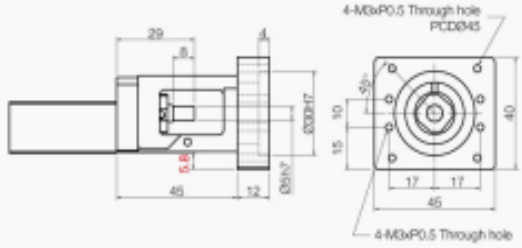

Panasonic Servo motor 50W+100W

4504

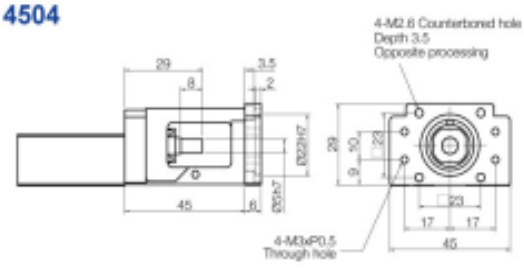

UT-Servo motor / Oriental stepping motor □28

4505

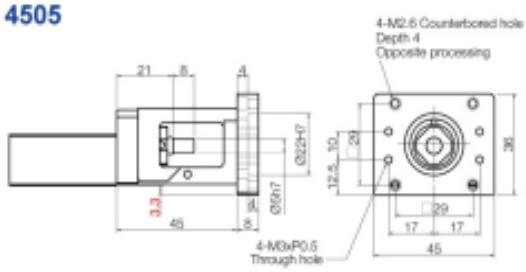

UT-Servo motor □35

4506

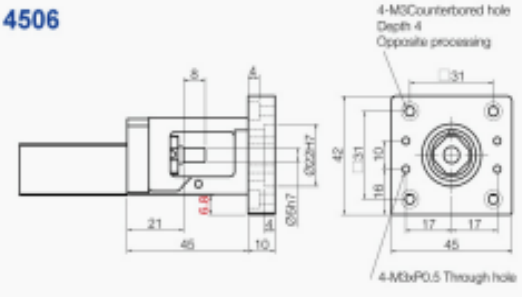

UT-Servo motor / Oriental stepping motor □42

4507

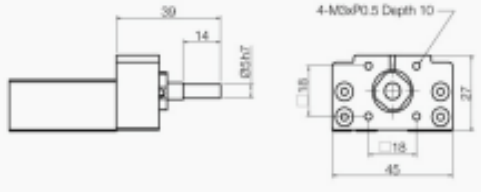

Motor adapter board fixing hole

Motor flange code

AU-55 Series

5500

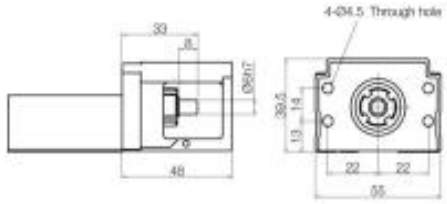

No motor and coupling

5501

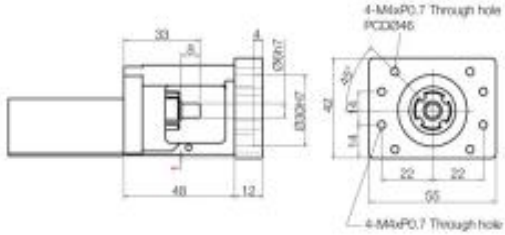

Mitsubishi / Yaskawa / Delta / Shihlin motor 50W+100W

5502

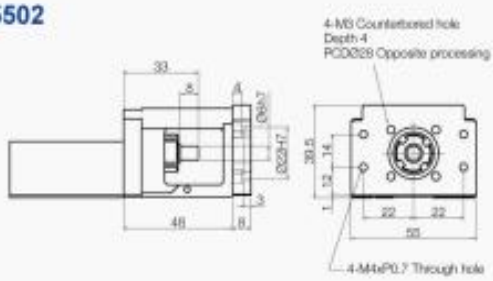

Panasonic Servo motor 30W

5503

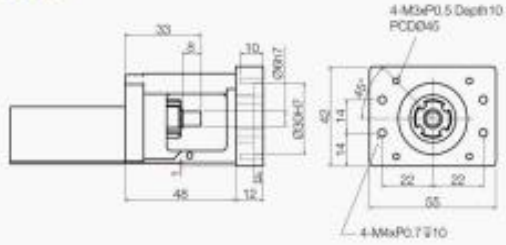

Panasonic Servo motor 50W+100W

5504

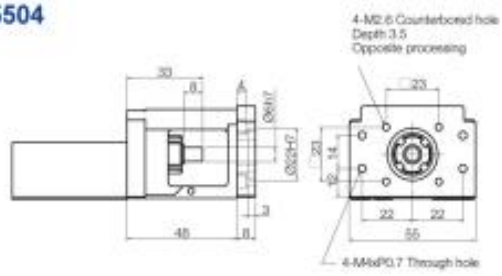

UT-Servo motor / Oriental stepping motor □28

5505

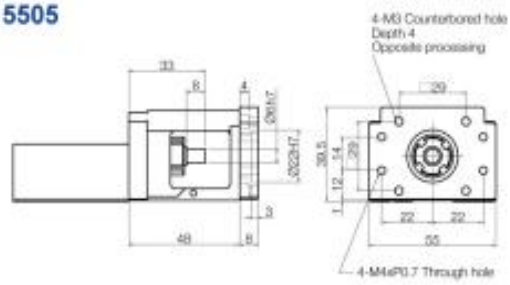

UT- Servo motor □35

5506

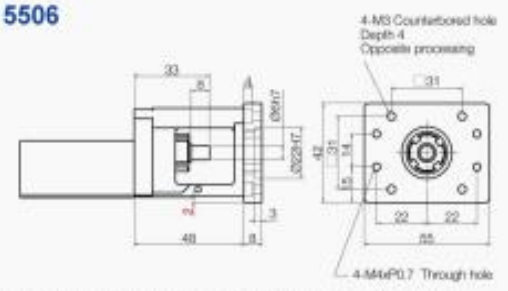

UT-Servo motor / Oriental stepping motor □42

5507

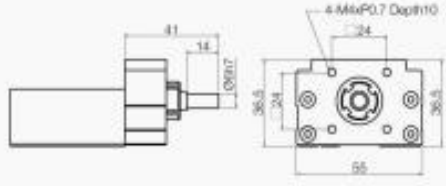

Motor adapter board fixing hole

Motor flange code

AU-65 Series

6500

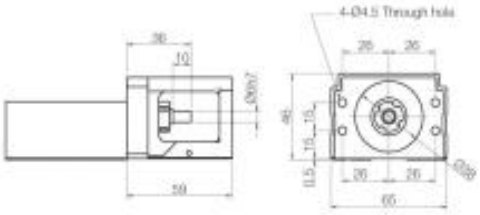

No motor and coupling

6501

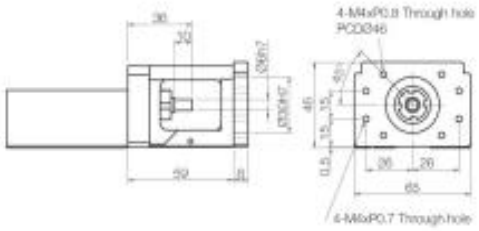

Mitsubishi / Yaskawa / Delta / Shihlin motor 50W+100W

6502

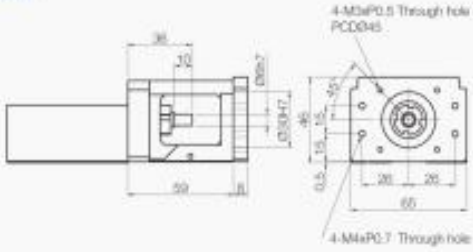

Panasonic Servo motor 50W+100W

6503

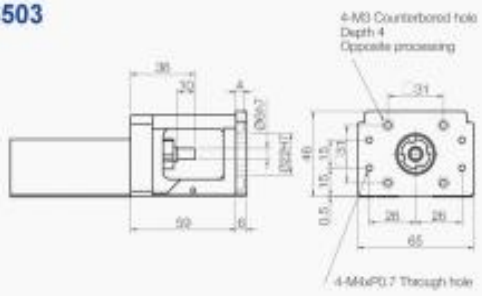

UT-Servo / Oriental stepping motor □42

6504

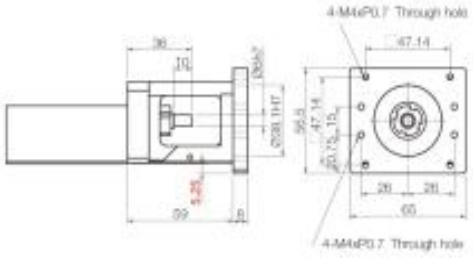

UT-Servo motor / Oriental stepping motor □56

6505

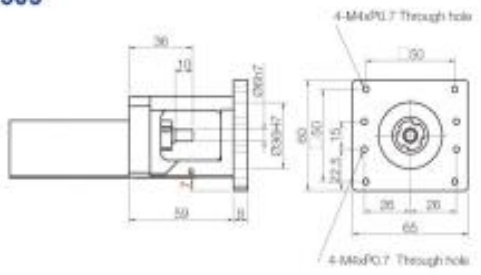

Oriental stepping motor □60

6507

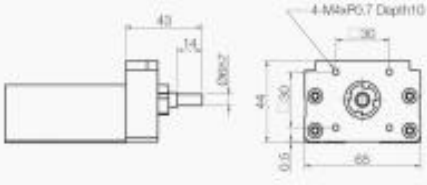

Motor adapter board fixing hole

Motor flange code

AU-88 Series

8800

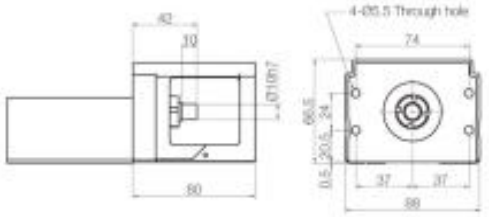

No motor and coupling

8801

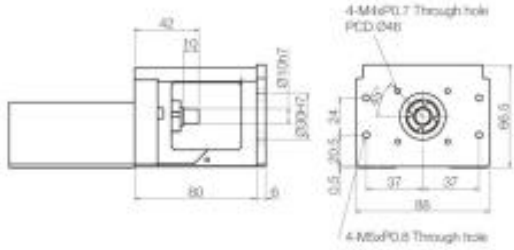

Mitsubishi / Yaskawa / Delta / Shihlin motor 50W+100W

8802

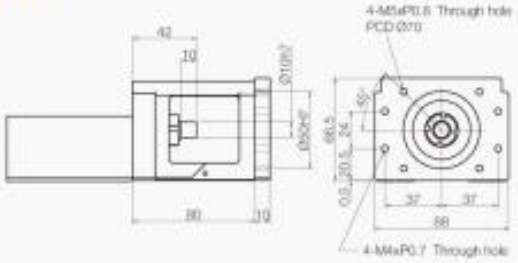

Mitsubishi / Yaskawa / Delta / Shihlin motor 200W+400W

8803

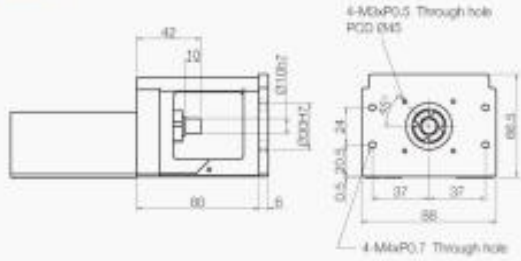

Panasonic Servo motor 50W+100W

8804

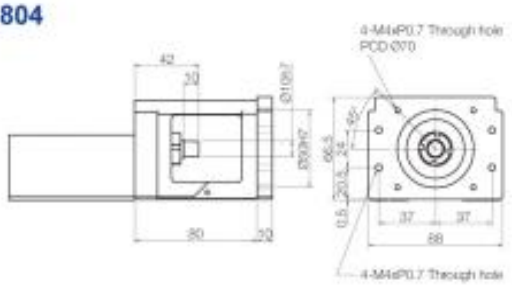

Panasonic Servo motor 200W+400W

8805

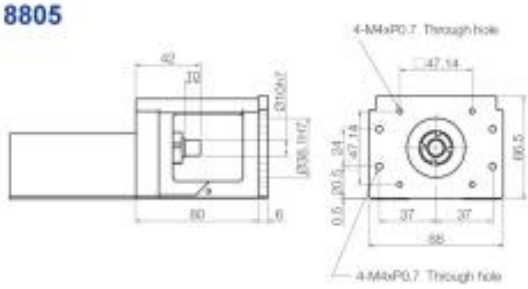

UT-Servo / Oriental stepping motor □56

8806

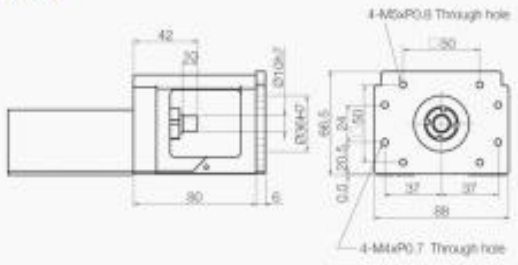

Oriental stepping motor □60

8807

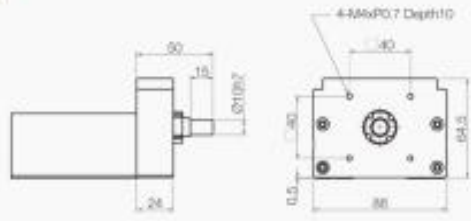

Motor adapter board fixing hole

Motor adapter board (For orientation below / right / left)

AU-45 Series

Motor orientation below

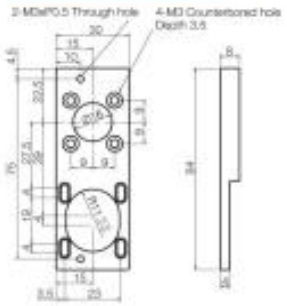

Motor orientation left

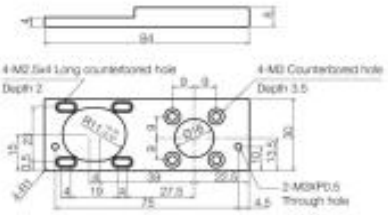

Motor orientation right

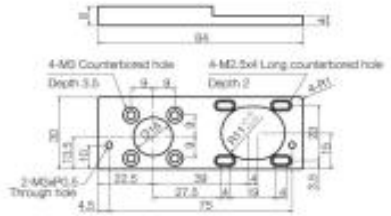

Suitable for UT-Servo □28 motor, please contact **Render** if you install other types of motors.

AU-55 Series

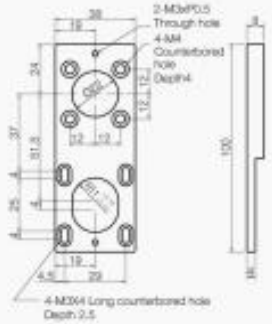

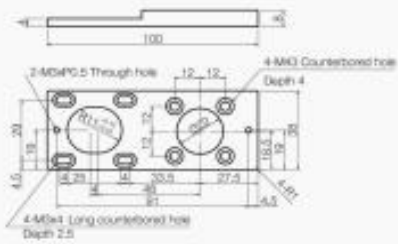

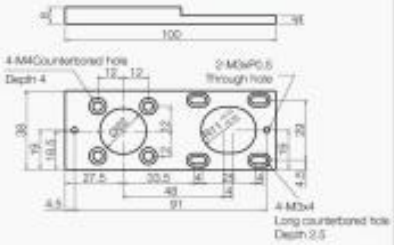

Suitable for UT-Servo □35 motor, please contact **Render** if you install other types of motors.

AU-65 Series

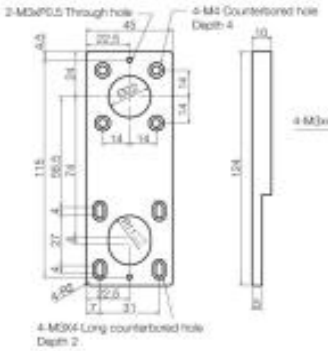

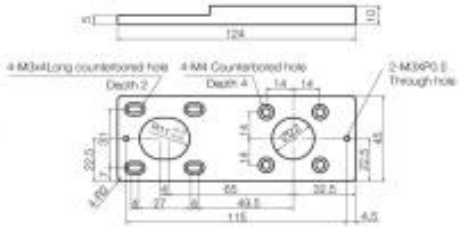

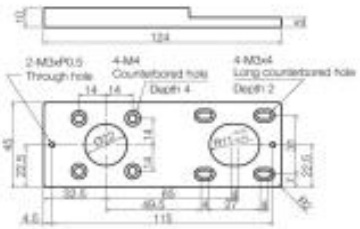

Suitable for UT-Servo □42 motor, please contact **Render** if you install other types of motors.

AU-88 Series

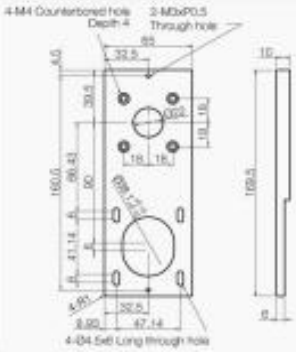

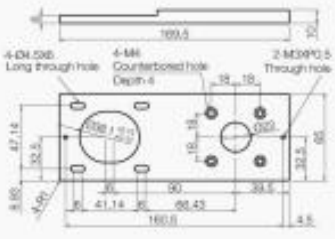

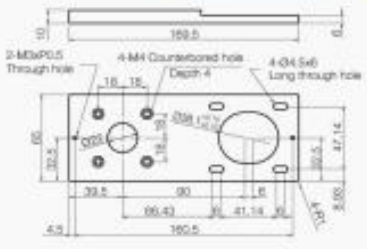

Suitable for UT-Servo □56 motor, please contact **Render** if you install other types of motors.

AU	45H	-	P	-	L100	A	-	1CS3L	-	MUT4501	-	K1	Introduction

AU	Product code	Electric built-in guideway servo actuator • ball screw driven
45	Body width	**45** : 45mm **55** : 55mm **65** : 65mm **88** : 88mm **L** : No-covered type **H** : Covered type **LS** : No-covered type / Light load **HS** : Covered type / Light load
-P	Pitch (lead)	**mm**
-L100	Track length	(Track length is not effective stroke, please refer to p24 to p50 of this catalog)
A	Sliding block	**A** : Standard single sliding block **B** : Standard two sliding blocks **C** : Light-load single sliding block **D** : Light-load two sliding blocks
-1	Motor orientation	**1** : Straight **2B** : Below **2L** : Left **2R** : Right
C	Accuracy	**C** : General **P** : Precise
S3L	Sensors location	**S0** : No Sensor **S1** : Only home point **S2** : Only L⁻, L⁺point **S3** : With 3 Sensor **L** : Externally on the left **R** : Externally on the right
-MUT	Flange fixing board	**M0** : No motor and motor flange **MS** : Servo motor **MUT** : UT Servo motor **MT** : Stepping motor
-K1	Coupling	**K0** : No coupling **K1** : With coupling

AU Series
L : No-covered type
LS : No-covered type / Light load
H : Covered type
HS : Covered type / Light load

AU-45 Electric Built-in Guideway Servo Actuator

Ball screw

Download

Motor rated output	30W, 50W	
Pitch / lead (mm) Ø8	1	2.5
Guideway rated dynamic load Ca (N)	1081	1081
Guideway rated static load Coa (N)	13583	13583
Repeatability (mm)	C crade : ±0.008 / P crade : ±0.003	
Horizotal thrust (Kg)	24	24
Vertical thrust (Kg)	3.5	7.5
Max. speed (mm/sec)	60	150
Coupling (d1xd2)	5 mm x 5 mm	

UT-SERVO □28

Load and overhang length

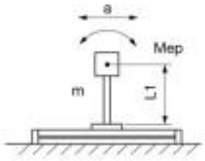

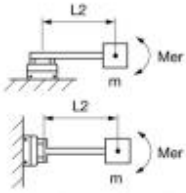

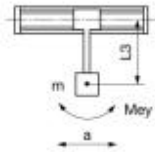

Horizotal installation
Load (Kg) and overhang length L1 (mm)

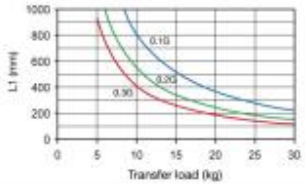

Horizotal / wall-mounted installation
Load (Kg) and overhang length L2 (mm)

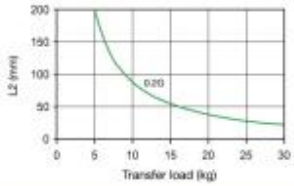

Wall-mounted installation
Load (Kg) and overhang length L3 (mm)

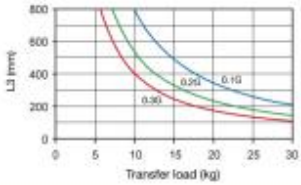

Center of gravity displacement of load moment

*Please appropriately reduce the motor speed to avoid vibration when actuator's stroke exceeds 300 mm

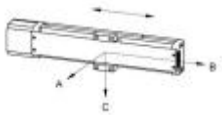

Static load moment table (N · m)

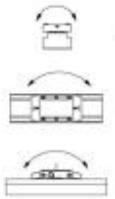

Unit : mm

Vertical installation		A	C
Pitch 1mm	2.5Kg	328	328
	3.0Kg	273	273
	3.5Kg	234	234
Pitch 2.5mm	4.0Kg	205	205
	6.0Kg	137	137
	7.5Kg	109	109

Unit : mm

Horizontal installation		A	B	C
Pitch 1mm	12Kg	680	67	84
	18Kg	425	42	53
	24Kg	298	29	37
Pitch 2.5mm	10Kg	833	82	103
	18Kg	425	42	53
	24Kg	298	29	37

Unit : mm

Wall-mounted installation		A	B	C
Pitch 1mm	12Kg	82	65	663
	18Kg	51	40	408
	24Kg	35	28	281
Pitch 2.5mm	15Kg	63	50	510
	20Kg	44	35	357
	24Kg	35	28	281

AU45-L-1

AU-45 STRAIGHT No-covered type -1

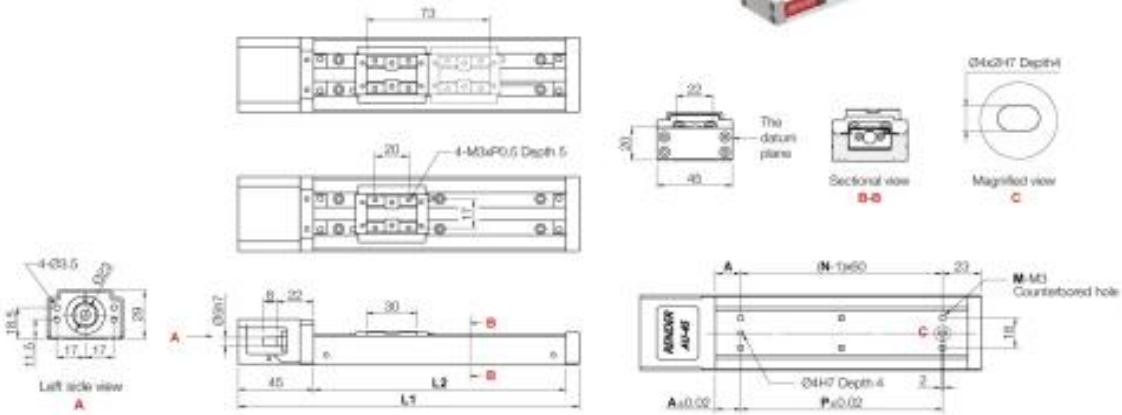

Total length L1(mm)	Track length L2(mm)	Effective stroke		A(mm)	N	M	P	Weight (kg)	
		A:standard single sliding block	B:standard two sliding blocks					A:standard single sliding block	B:standard two sliding blocks
154	100	42	–	20	2	4	60	0.39	–
204	150	92	49	15	3	6	120	0.48	0.52
254	200	142	99	40	3	6	180	0.57	0.61

AU45-H-1

AU-45 STRAIGHT Covered type -1

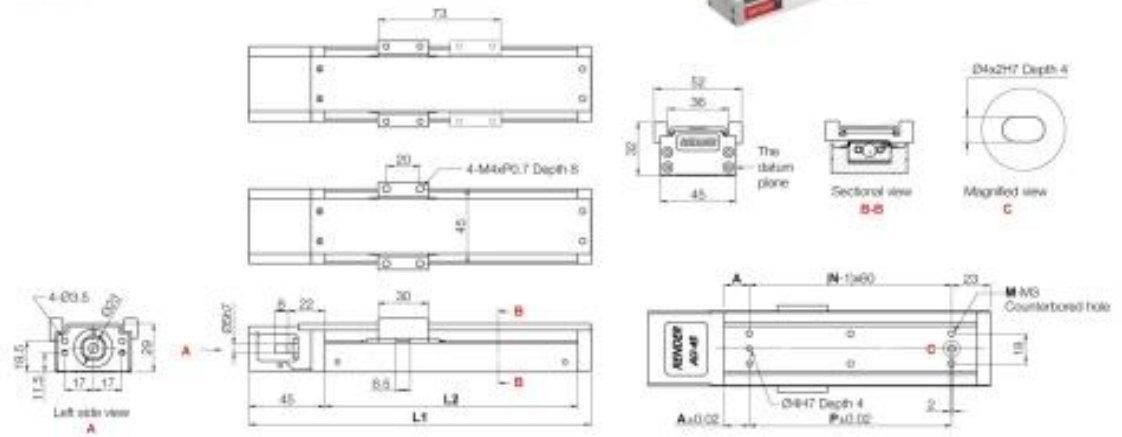

Total length L1(mm)	Track length L2(mm)	Effective stroke		A(mm)	N	M	P	Weight (kg)	
		A:standard single sliding block	B:standard two sliding blocks					A:standard single sliding block	B:standard two sliding blocks
154	100	42	–	20	2	4	60	0.46	–
204	150	92	49	15	3	6	120	0.56	0.6
254	200	142	99	40	3	6	180	0.66	0.7

AU45-L-2B

AU-45 BELOW No-covered type-2B

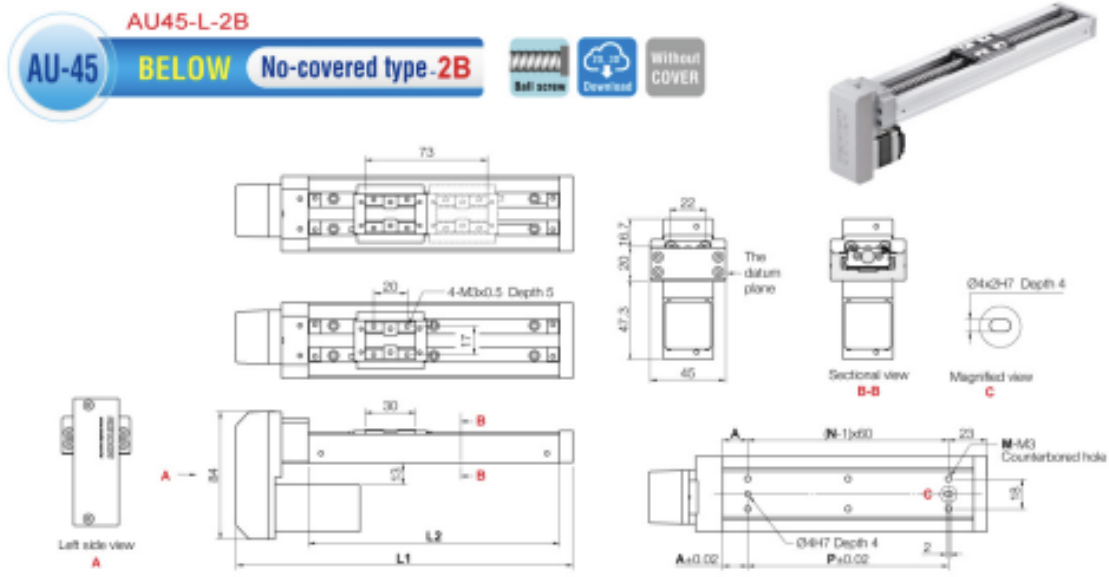

Total length L1(mm)	Track length L2(mm)	Effective stroke		A(mm)	N	M	P	Weight (kg)	
		A:standard single sliding block	B:standard two sliding blocks					A:standard single sliding block	B:standard two sliding blocks
153	100	42	–	20	2	4	60	0.33	–
203	150	92	49	15	3	6	120	0.41	0.45
253	200	142	99	40	3	6	180	0.50	0.54

AU45-L-2L

AU-45 LEFT No-covered type-2L

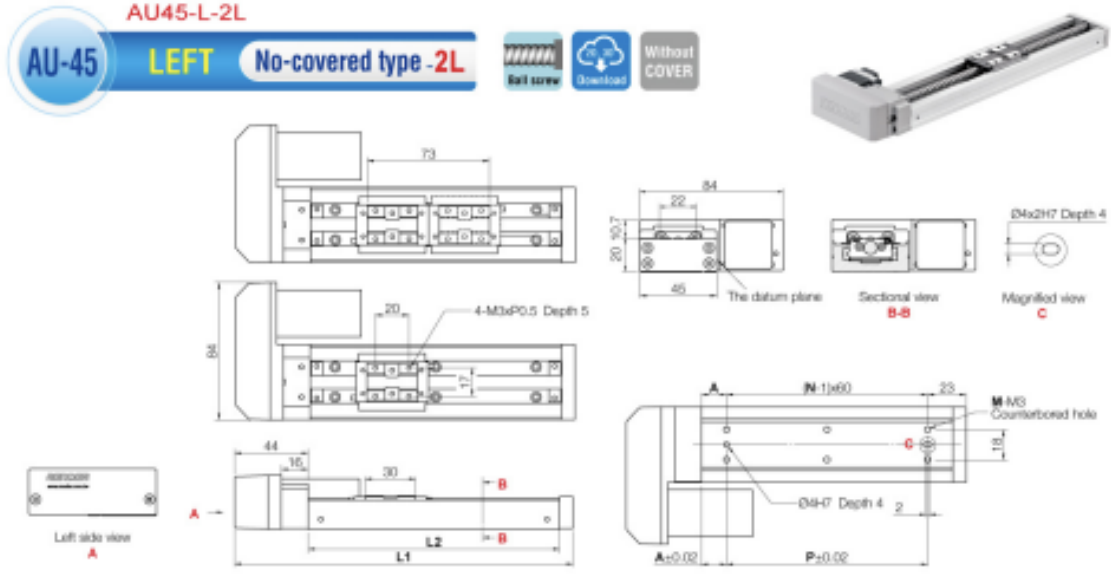

Total length L1(mm)	Track length L2(mm)	Effective stroke		A(mm)	N	M	P	Weight (kg)	
		A:standard single sliding block	B:standard two sliding blocks					A:standard single sliding block	B:standard two sliding blocks
153	100	42	–	20	2	4	60	0.33	–
203	150	92	49	15	3	6	120	0.41	0.45
253	200	142	99	40	3	6	180	0.50	0.54

AU45-L-2R

AU-45 RIGHT No-covered type -2R

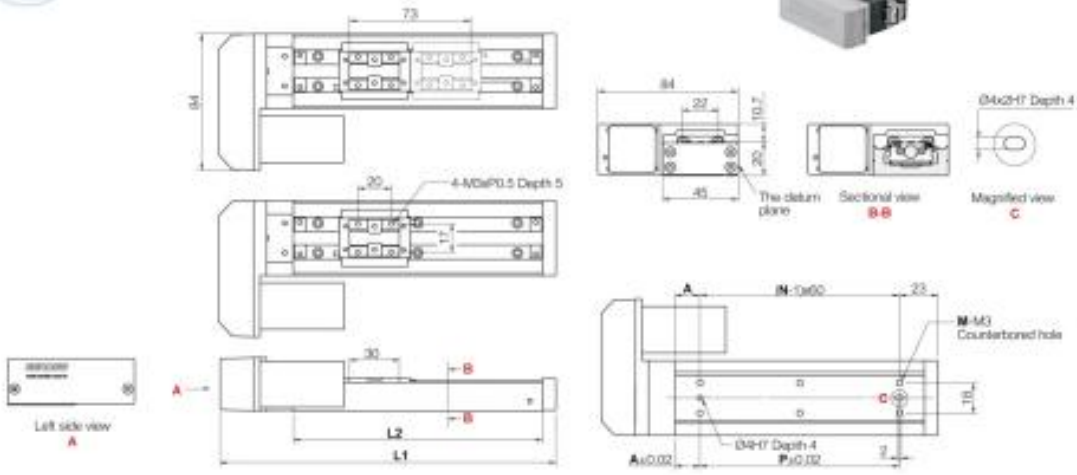

Total length L1(mm)	Track length L2(mm)	Effective stroke		A(mm)	N	M	P	Weight (kg)	
		A:standard single sliding block	B:standard two sliding blocks					A:standard single sliding block	B:standard two sliding blocks
153	100	42	–	20	2	4	60	0.33	–
203	150	92	49	15	3	6	120	0.41	0.45
253	200	142	99	40	3	6	180	0.50	0.54

AU45-H-2B

AU-45 BELOW Covered type -2B

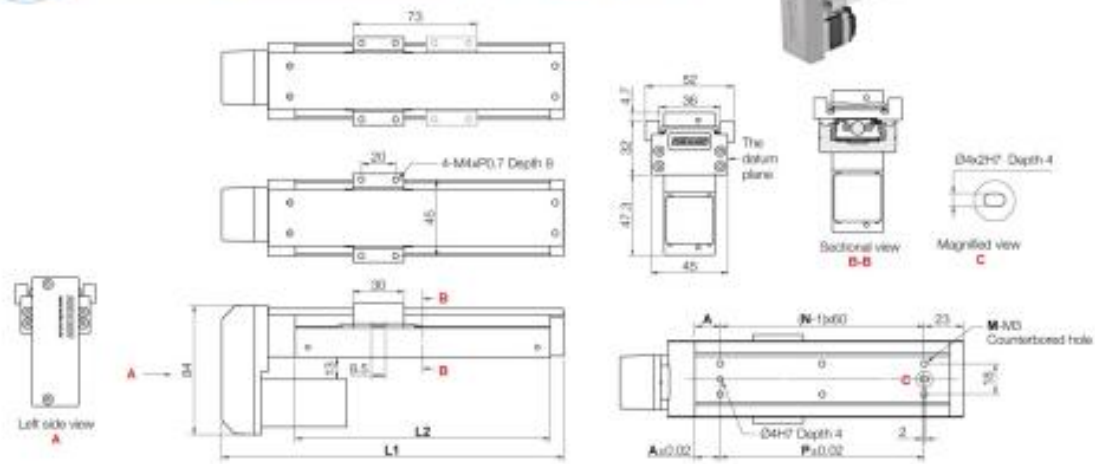

Total length L1(mm)	Track length L2(mm)	Effective stroke		A(mm)	N	M	P	Weight (kg)	
		A:standard single sliding block	B:standard two sliding blocks					A:standard single sliding block	B:standard two sliding blocks
153	100	42	–	20	2	4	60	040	–
203	150	92	49	15	3	6	120	0.49	0.53
253	200	142	99	40	3	6	180	0.59	0.63

AU45-H-2L

AU-45 LEFT Covered type -2L

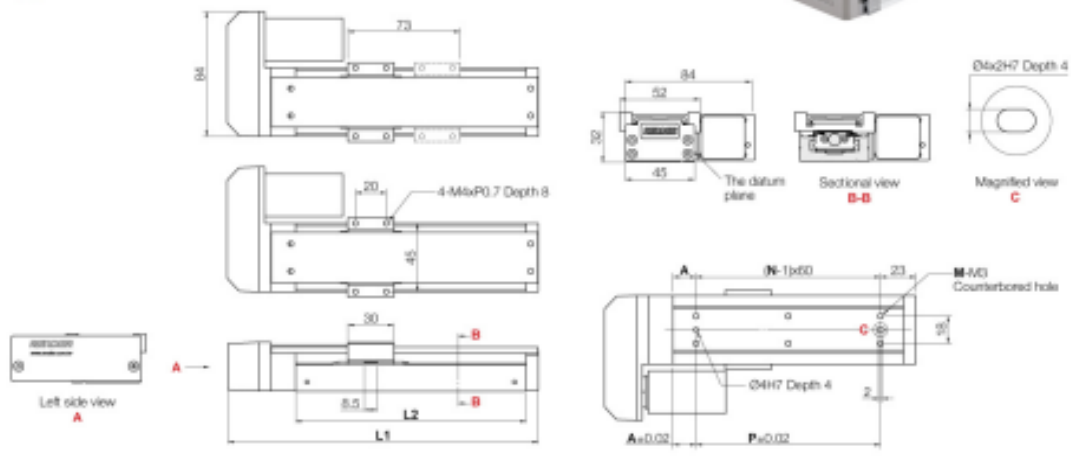

Total length L1(mm)	Track length L2(mm)	Effective stroke		A(mm)	N	M	P	Weight (kg)	
		A:standard single sliding block	B:standard two sliding blocks					A:standard single sliding block	B:standard two sliding blocks
153	100	42	–	20	2	4	60	0.40	–
203	150	92	49	15	3	6	120	0.49	0.53
253	200	142	99	40	3	6	180	0.59	0.63

AU45-H-2R

AU-45 RIGHT Covered type -2R

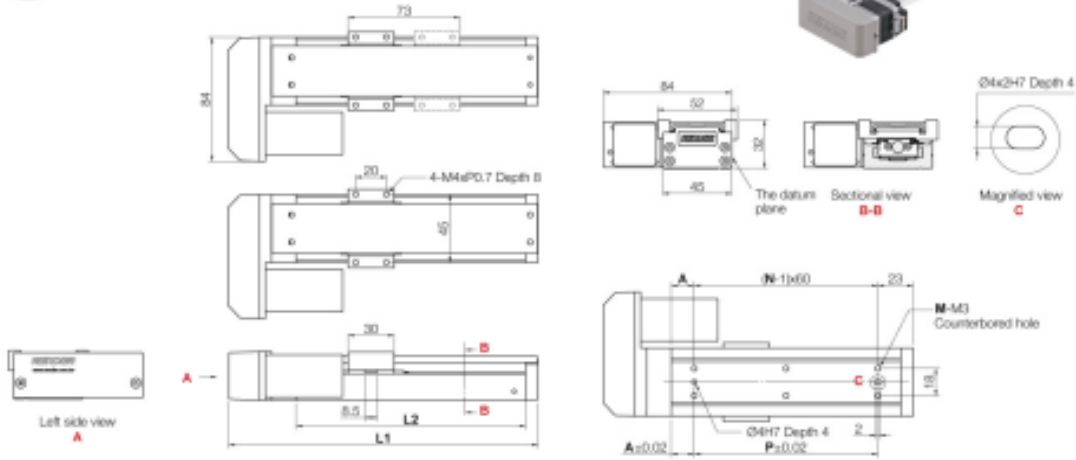

Total length L1(mm)	Track length L2(mm)	Effective stroke		A(mm)	N	M	P	Weight (kg)	
		A:standard single sliding block	B:standard two sliding blocks					A:standard single sliding block	B:standard two sliding blocks
153	100	42	–	20	2	4	60	0.40	–
203	150	92	49	15	3	6	120	0.49	0.53
253	200	142	99	40	3	6	180	0.59	0.63

AU-55 Electric Built-in Guideway Servo Actuator

Ball screw

2D, 3D Download

Motor rated output	50W		
Pitch / lead (mm) Ø10	2	5	10
Guideway rated dynamic load Ca (N)	1262	1262	1262
Guideway rated static load Coa (N)	16720	16720	16720
Repeatability (mm)	C crade : ±0.008 / P crade : ±0.003		
Horizotal thrust (Kg)	40	28	15
Vertical thrust (Kg)	15	9	3.2
Max. speed (mm/sec)	120	290	580
Coupling (d1xd2)			

UT-SERVO □35

Load and overhang length

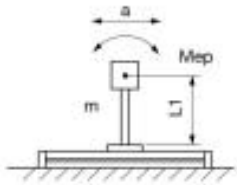

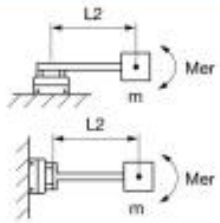

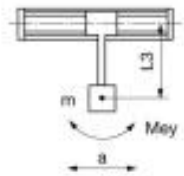

Horizotal installation
Load (Kg) and overhang length L1 (mm)

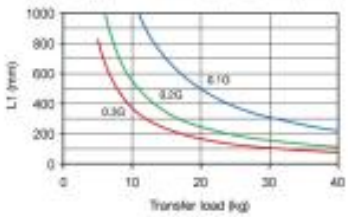

Horizotal / wall-mounted installation
Load (Kg) and overhang length L2 (mm)

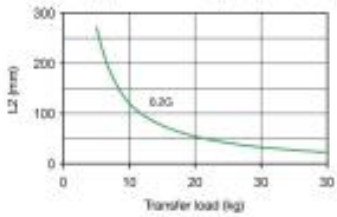

Wall-mounted installation
Load (Kg) and overhang length L3 (mm)

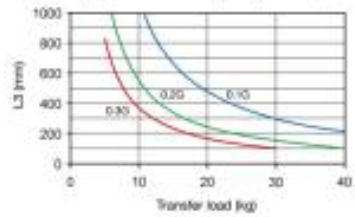

Center of gravity displacement of load moment

*Please appropriately reduce the motor speed to avoid vibration when actuator's stroke exceeds 300 mm

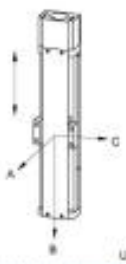

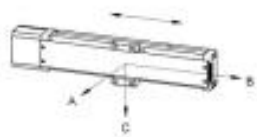

Static load moment table (N · m)

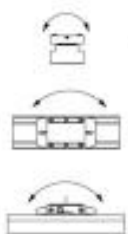

Unit : mm

Vertical installation		A	C
Pitch 2mm	7.0Kg	156	156
	10.0Kg	109	109
	15.0Kg	73	73
Pitch 5mm	7.0Kg	149	149
	13.0Kg	80	80
	15.0Kg	70	70
Pitch 10mm	0.8Kg	1205	1205
	1.6Kg	602	602
	3.2Kg	301	301

Unit : mm

Horizontal installation		A	B	C
Pitch 2mm	20Kg	515	50	72
	30Kg	311	30	44
	40Kg	209	20	29
Pitch 5mm	20Kg	343	50	68
	30Kg	207	30	41
	40Kg	139	20	27
Pitch 10mm	15Kg	288	70	83
	25Kg	157	38	46
	40Kg	84	20	24

Unit : mm

Wall-mounted installation		A	B	C
Pitch 2mm	10Kg	156	109	1108
	20Kg	70	49	496
	30Kg	41	29	292
Pitch 5mm	10Kg	145	109	739
	20Kg	65	49	331
	30Kg	38	29	194
Pitch 10mm	5Kg	271	229	933
	10Kg	129	109	443
	15Kg	81	69	280

AU55-L-1

AU-55 STRAIGHT No-covered type -1

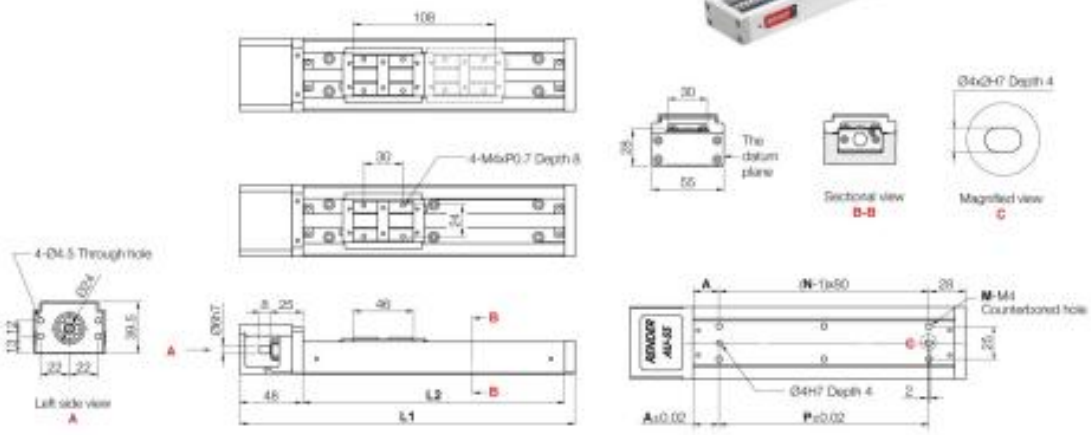

Total length L1(mm)	Track length L2(mm)	Effective stroke		A(mm)	N	M	P	Weight (kg)	
		A standard single sliding block	B standard two sliding blocks					A standard single sliding block	B standard two sliding blocks
207	150	73	-	35	2	4	80	0.80	-
257	200	123	60	20	3	6	160	0.94	1.06
307	250	173	110	45	3	6	160	1.08	1.20
357	300	223	160	30	4	8	240	1.22	1.34

AU55-H-1

AU-55 STRAIGHT Covered type -1

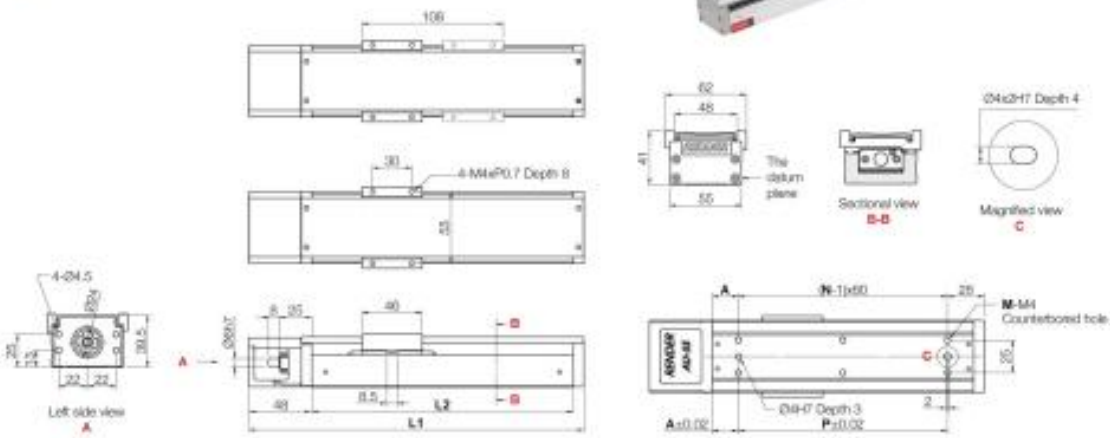

Total length L1(mm)	Track length L2(mm)	Effective stroke		A(mm)	N	M	P	Weight (kg)	
		A standard single sliding block	B standard two sliding blocks					A standard single sliding block	B standard two sliding blocks
207	150	73	-	35	2	4	80	0.91	-
257	200	123	60	20	3	6	160	1.07	1.20
307	250	173	110	45	3	6	160	1.23	1.35
357	300	223	160	30	4	8	240	1.39	1.51

AU55-L-2B

AU-55 BELOW No-covered type-2B

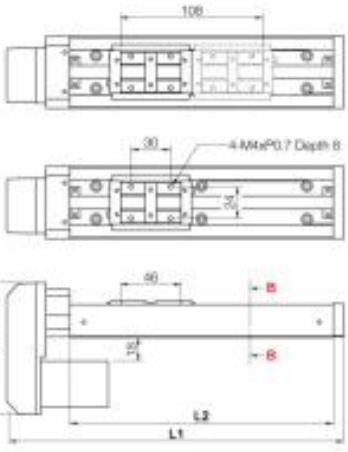

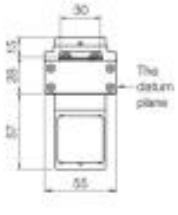

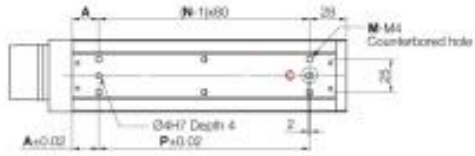

Total length L1(mm)	Track length L2(mm)	Effective stroke		A(mm)	N	M	P	Weight (kg)	
		A standard single sliding block	B standard two sliding blocks					A standard single sliding block	B standard two sliding blocks
206	150	73	-	35	2	4	80	0.72	-
256	200	123	60	20	3	6	160	0.86	0.99
306	250	173	110	45	3	6	160	1.00	1.13
356	300	223	160	30	4	8	240	1.14	1.27

AU55-L-2L

AU-55 LEFT No-covered type-2L

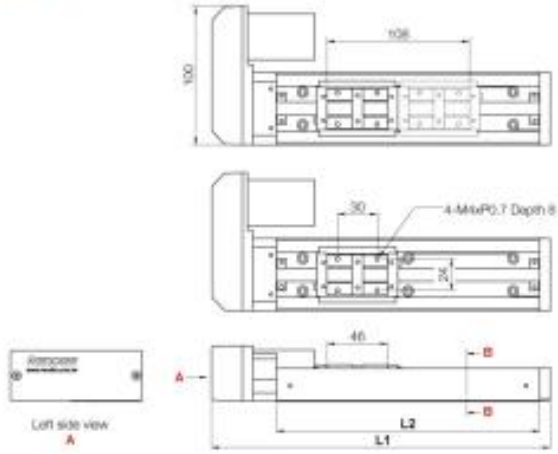

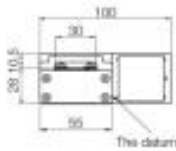

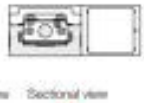

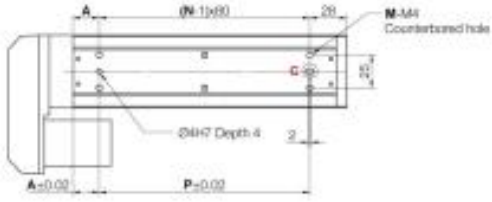

Total length L1(mm)	Track length L2(mm)	Effective stroke		A(mm)	N	M	P	Weight (kg)	
		A standard single sliding block	B standard two sliding blocks					A standard single sliding block	B standard two sliding blocks
206	150	73	-	35	2	4	80	0.72	-
256	200	123	60	20	3	6	160	0.86	0.99
306	250	173	110	45	3	6	160	1.00	1.13
356	300	223	160	30	4	8	240	1.14	1.27

AU55-L-2R

AU-55 RIGHT No-covered type-2R

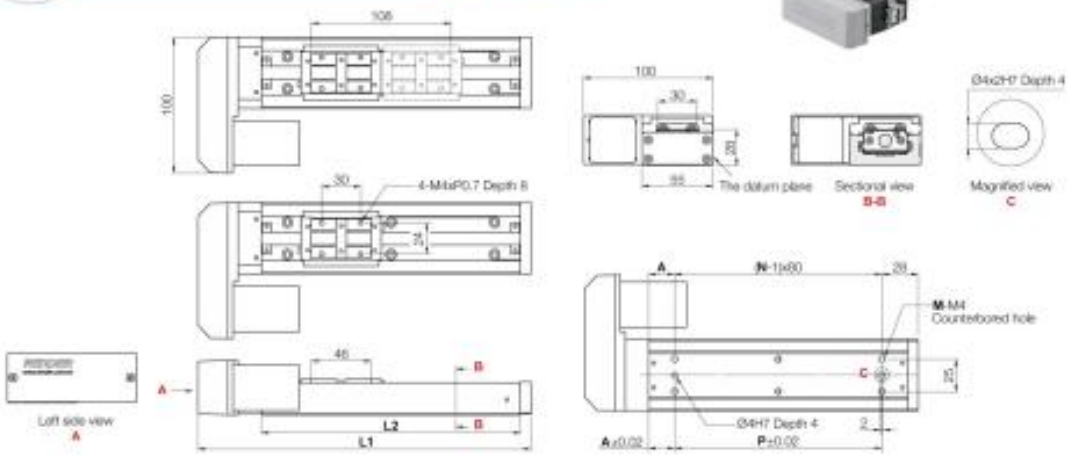

Total length L1(mm)	Track length L2(mm)	Effective stroke A:standard single sliding block	Effective stroke B:standard two sliding blocks	A(mm)	N	M	P	Weight (kg) A:standard single sliding block	Weight (kg) B:standard two sliding blocks
206	150	73	-	35	2	4	80	0.72	-
256	200	123	60	20	3	6	160	0.86	0.99
306	250	173	110	45	3	6	160	1.00	1.13
356	300	223	160	30	4	8	240	1.14	1.27

AU55-H-2B

AU-55 BELOW Covered type-2B

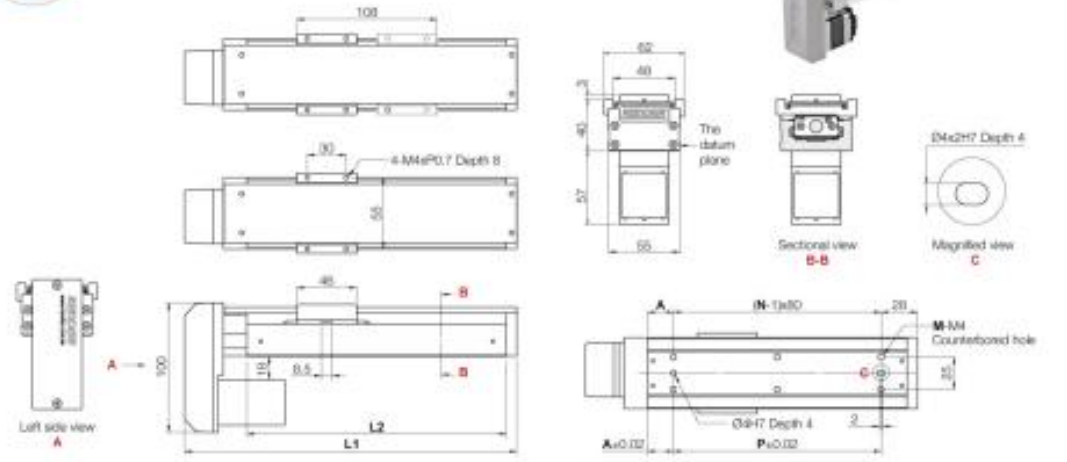

Total length L1(mm)	Track length L2(mm)	Effective stroke A:standard single sliding block	Effective stroke B:standard two sliding blocks	A(mm)	N	M	P	Weight (kg) A:standard single sliding block	Weight (kg) B:standard two sliding blocks
206	150	73	-	35	2	4	80	0.84	-
256	200	123	60	20	3	6	160	1.00	1.12
306	250	173	110	45	3	6	160	1.16	1.28
356	300	223	160	30	4	8	240	1.31	1.44

AU55-H-2L

AU-55 LEFT Covered type -2L

Ball screw | Download | With COVER

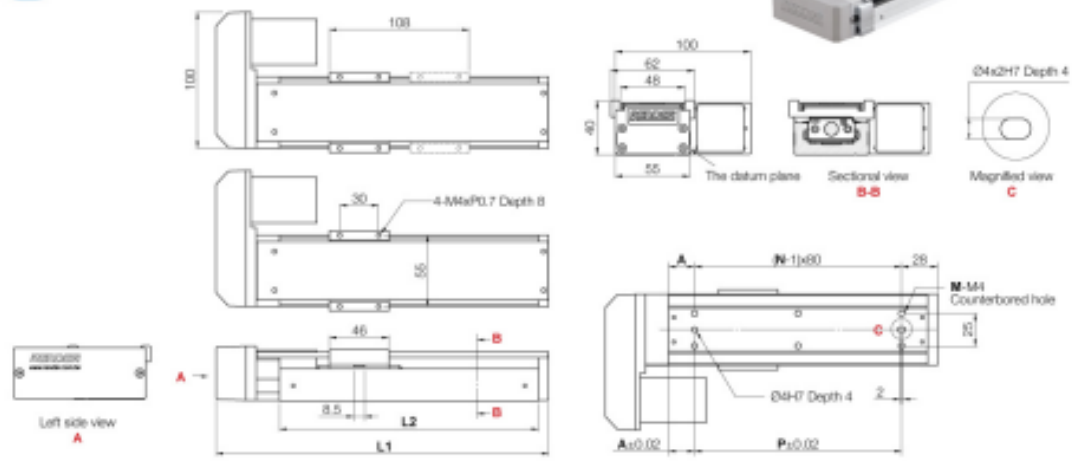

Total length L1(mm)	Track length L2(mm)	Effective stroke		A(mm)	N	M	P	Weight (kg)	
		A:standard single sliding block	B:standard two sliding blocks					A:standard single sliding block	B:standard two sliding blocks
206	150	73	-	35	2	4	80	0.84	-
256	200	123	60	20	3	6	160	1.00	1.12
306	250	173	110	45	3	6	160	1.16	1.28
356	300	223	160	30	4	8	240	1.31	1.44

AU55-H-2R

AU-55 RIGHT Covered type -2R

Ball screw | Download | With COVER

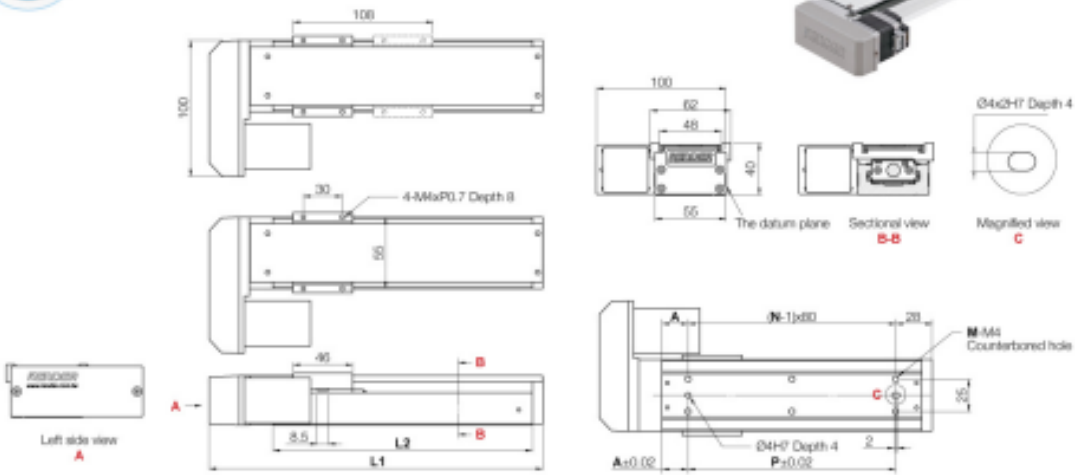

Total length L1(mm)	Track length L2(mm)	Effective stroke		A(mm)	N	M	P	Weight (kg)	
		A:standard single sliding block	B:standard two sliding blocks					A:standard single sliding block	B:standard two sliding blocks
206	150	73	-	35	2	4	80	0.84	-
256	200	123	60	20	3	6	160	1.00	1.12
306	250	173	110	45	3	6	160	1.16	1.28
356	300	223	160	30	4	8	240	1.31	1.44

AU-65 Electric Built-in Guideway Servo Actuator

Ball screw

2D, 3D Download

Motor rated output	100W		
Pitch / lead (mm) Ø12	5	10	20
Guideway rated dynamic load Ca (N)	2036	2036	2036
Guideway rated static load Coa (N)	29401	29401	29401
Repeatability (mm)	C grade : ±0.008 / P grade : ±0.003		
Horizotal thrust (Kg)	45	30	10
Vertical thrust (Kg)	15	10	3.2
Max. speed (mm/sec)	290	580	1000
Coupling (d1xd2)	5 mm x 8 mm		

Load and overhang length

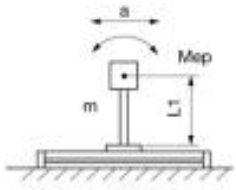

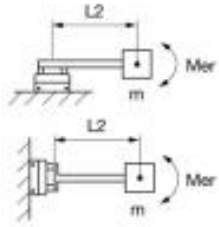

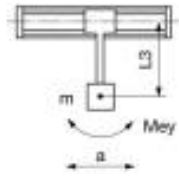

Horizotal installation
Load (Kg) and overhang length L1 (mm)

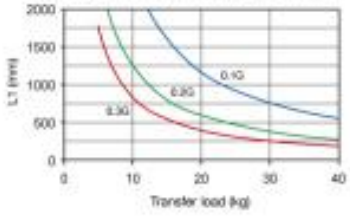

Horizotal / wall-mounted installation
Load (Kg) and overhang length L2 (mm)

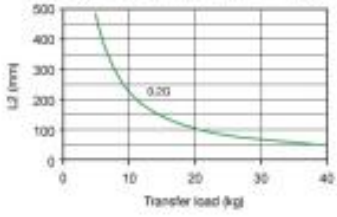

Wall-mounted installation
Load (Kg) and overhang length L3 (mm)

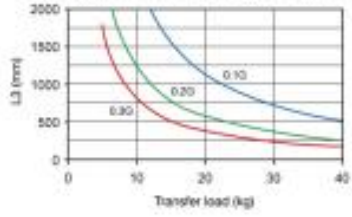

Center of gravity displacement of load moment

*Please appropriately reduce the motor speed to avoid vibration when actuator's stroke exceeds 500 mm

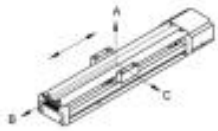

Static load moment table (N · m)

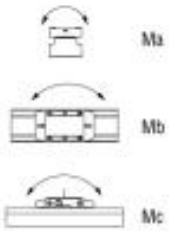

Unit : mm

Vertical installation		A	C
Pitch 5mm	7.0Kg	324	324
	12.0Kg	189	189
	15.0Kg	151	151
Pitch 10mm	0.8Kg	2610	2610
	1.6Kg	1305	1305
	3.2Kg	653	653
Pitch 20mm	0.4Kg	5023	5023
	0.8Kg	2512	2512
	1.2Kg	1674	1674

Unit : mm

Horizontal installation		A	B	C
Pitch 5mm	25Kg	621	91	98
	30Kg	503	74	79
	40Kg	355	52	56
Pitch 10mm	15Kg	655	161	155
	25Kg	372	91	88
	40Kg	213	52	51
Pitch 20mm	5Kg	1725	507	469
	10Kg	841	247	229
	13Kg	637	187	173

Unit : mm

Wall-mounted installation		A	B	C
Pitch 5mm	10Kg	262	245	1664
	20Kg	123	115	780
	30Kg	76	71	485
Pitch 10mm	5Kg	489	505	2060
	10Kg	237	245	999
	15Kg	153	158	645
Pitch 20mm	4Kg	587	635	2159
	8Kg	286	310	1053
	10Kg	226	245	832

AU65-L-1

AU-65 STRAIGHT No-covered type -1

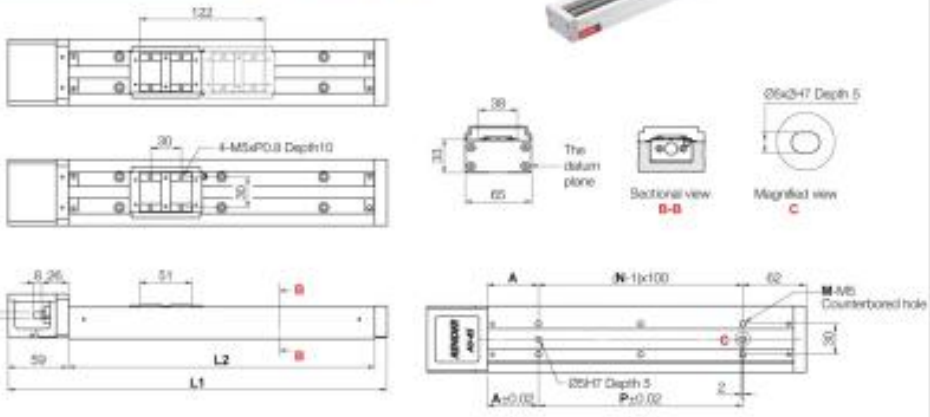

Total length L1(mm)	Track length L2(mm)	Effective stroke		A(mm)	N	M	P	Weight (kg)	
		A standard single sliding block	B standard two sliding blocks					A standard single sliding block	B standard two sliding blocks
222	150	60	-	25	2	4	50	1.51	-
302	200	110	-	50	2	4	100	1.77	-
402	300	210	139	50	3	6	200	2.03	2.16
502	400	310	239	50	4	8	300	2.29	2.42
602	500	410	339	50	5	10	400	2.55	2.68
702	600	510	439	50	6	12	500	2.81	2.94

AU65-LS-1

AU-65 STRAIGHT LIGHT LOAD No-covered type -1

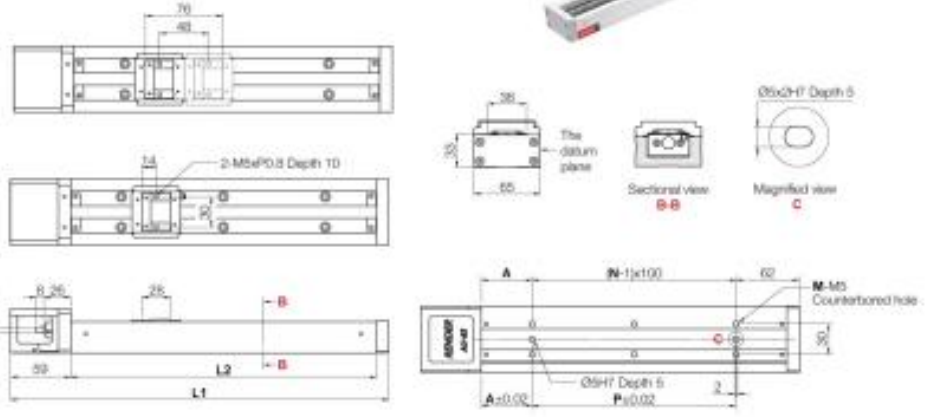

Total length L1(mm)	Track length L2(mm)	Effective stroke		A(mm)	N	M	P	Weight (kg)	
		C light-load single sliding block	D light-load two sliding blocks					C light-load single sliding block	D light-load two sliding blocks
222	150	83	35	25	2	4	50	1.38	1.50
302	200	133	85	50	2	4	100	1.64	1.76
402	300	233	185	50	3	6	200	1.90	2.02
502	400	333	285	50	4	8	300	2.16	2.28
602	500	433	385	50	5	10	400	2.42	2.54
702	600	533	485	50	6	12	500	2.68	2.80

AU65-H-1

AU-65 STRAIGHT Covered type -1

Ball screw | Download | With COVER

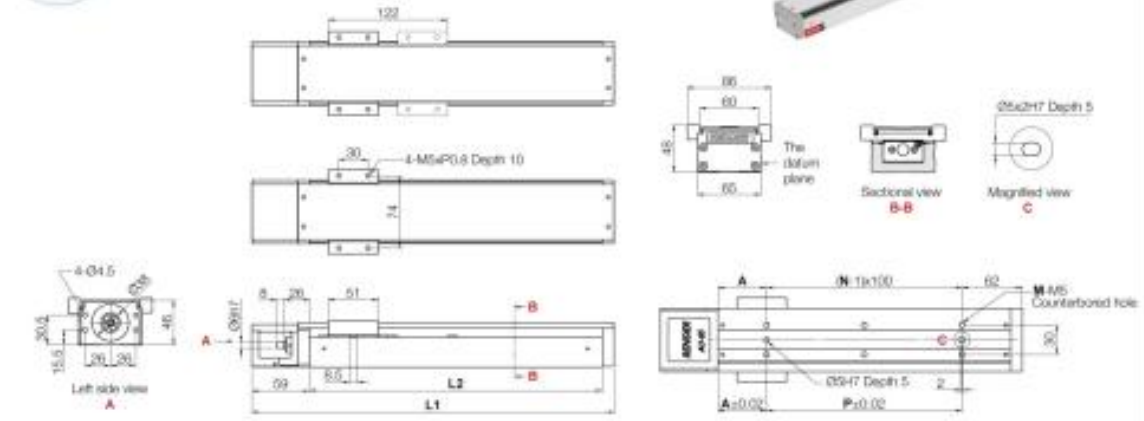

Total length L1(mm)	Track length L2(mm)	Effective stroke		A(mm)	N	M	P	Weight (kg)	
		A standard single sliding block	B standard two sliding blocks					A standard single sliding block	B standard two sliding blocks
222	150	60	-	25	2	4	50	1.94	-
302	200	110	-	50	2	4	100	2.20	-
402	300	210	139	50	3	6	200	2.46	2.59
502	400	310	239	50	4	8	300	2.72	2.85
602	500	410	339	50	5	10	400	2.98	3.11
702	600	510	439	50	6	12	500	3.24	3.37

AU65-HS-1

AU-65 STRAIGHT LIGHT LOAD Covered type -1

Ball screw | Download | With COVER

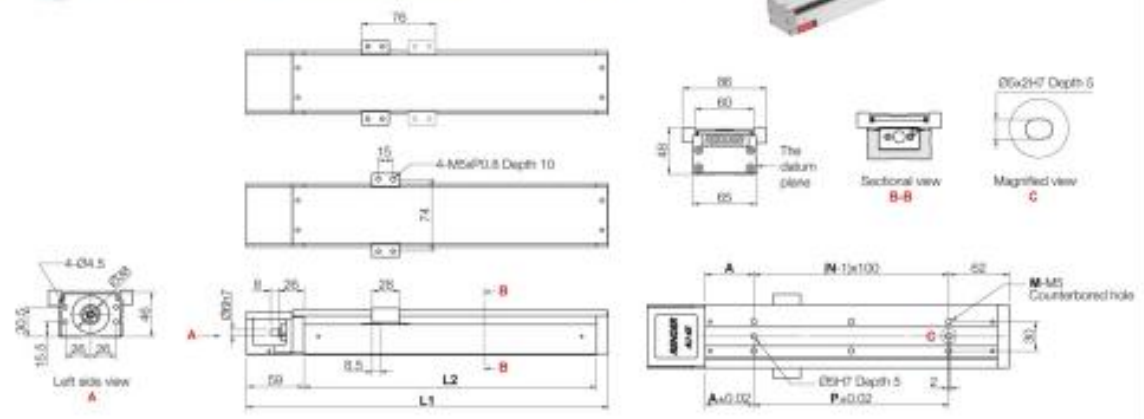

Total length L1(mm)	Track length L2(mm)	Effective stroke		A(mm)	N	M	P	Weight (kg)	
		C light-load single sliding block	D light-load two sliding blocks					C light-load single sliding block	D light-load two sliding blocks
222	150	83	35	25	2	4	50	1.81	1.96
302	200	133	85	50	2	4	100	2.07	2.22
402	300	233	185	50	3	6	200	2.33	2.48
502	400	333	285	50	4	8	300	2.59	2.74
602	500	433	385	50	5	10	400	2.85	3.00
702	600	533	485	50	6	12	500	3.11	3.26

AU65-L-2B

AU-65 BELOW No-covered type-2B

Ball screw | Download | Without COVER

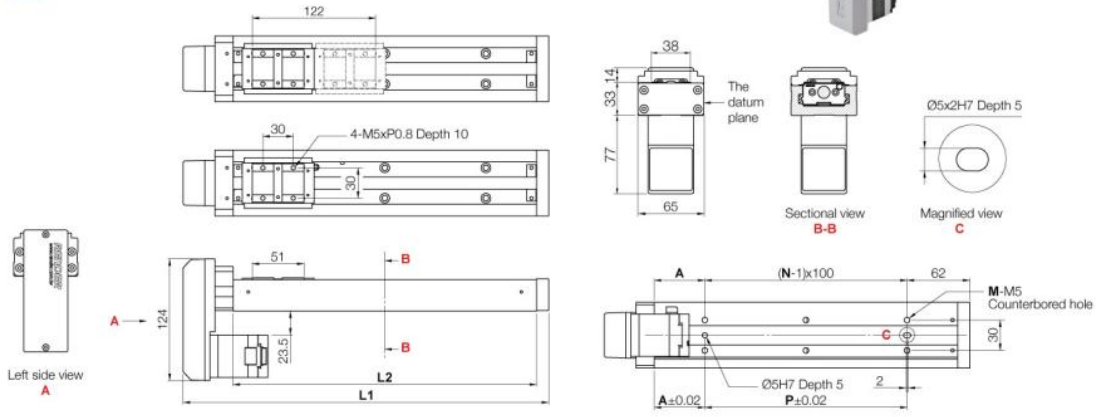

Total length L1(mm)	Track length L2(mm)	Effective stroke		A(mm)	N	M	P	Weight (kg)	
		A:standard single sliding block	B:standard two sliding blocks					A:standard single sliding block	B:standard two sliding blocks
213	150	60	-	25	2	4	50	1.75	-
263	200	110	-	50	2	4	100	2.01	-
363	300	210	139	50	3	6	200	2.27	2.42
463	400	310	239	50	4	8	300	2.53	2.68
563	500	410	339	50	5	10	400	2.79	2.94
663	600	510	439	50	6	12	500	3.05	3.20

AU65-L-2L

AU-65 LEFT No-covered type-2L

Ball screw | Download | Without COVER

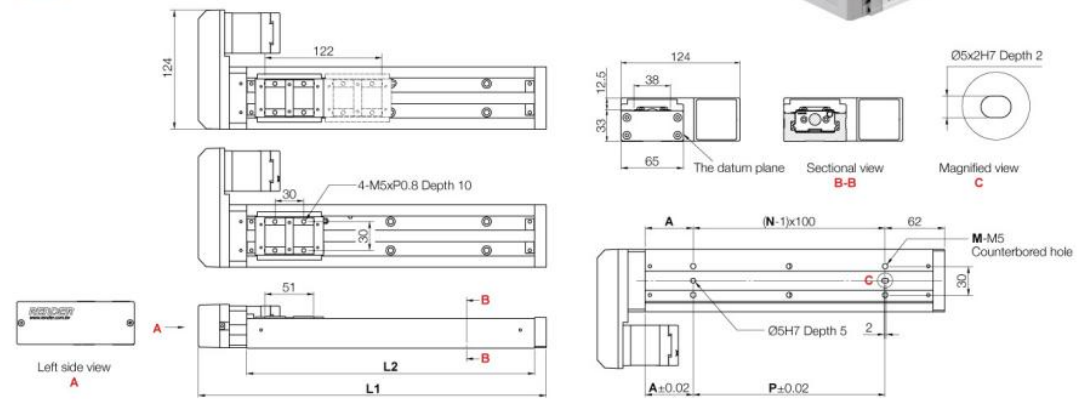

Total length L1(mm)	Track length L2(mm)	Effective stroke		A(mm)	N	M	P	Weight (kg)	
		A:standard single sliding block	B:standard two sliding blocks					A:standard single sliding block	B:standard two sliding blocks
213	150	60	-	25	2	4	50	1.75	-
263	200	110	-	50	2	4	100	2.01	-
363	300	210	139	50	3	6	200	2.27	2.42
463	400	310	239	50	4	8	300	2.53	2.68
563	500	410	339	50	5	10	400	2.79	2.94
663	600	510	439	50	6	12	500	3.05	3.20

AU65-L-2R

AU-65 RIGHT No-covered type -2R

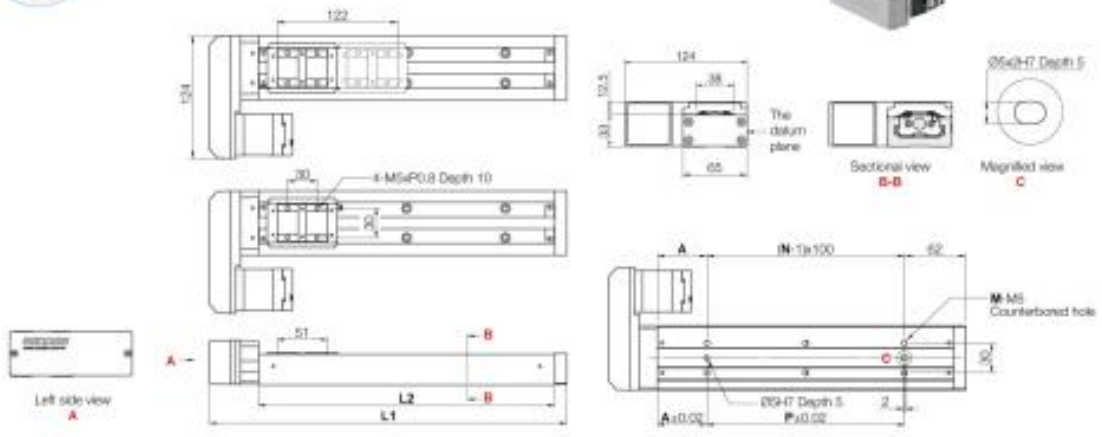

Total length L1(mm)	Track length L2(mm)	Effective stroke		A(mm)	N	M	P	Weight (kg)	
		A standard single sliding block	B standard two sliding blocks					A standard single sliding block	B standard two sliding blocks
213	150	60	-	25	2	4	50	1.75	-
263	200	110	-	50	2	4	100	2.01	-
363	300	210	139	50	3	6	200	2.27	2.42
463	400	310	239	50	4	8	300	2.53	2.68
563	500	410	339	50	5	10	400	2.79	2.94
663	600	510	439	50	6	12	500	3.05	3.20

AU65-LS-2B

AU-65 BELOW LIGHT LOAD No-covered type -2B

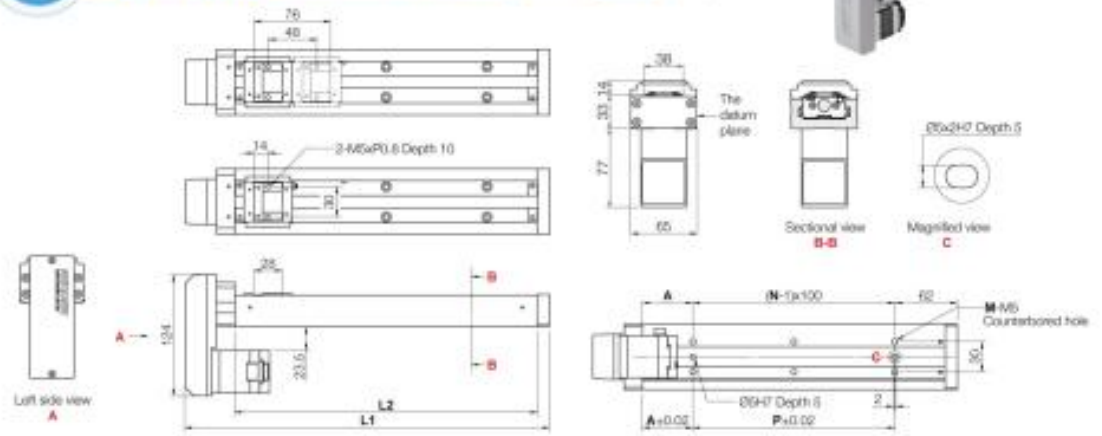

Total length L1(mm)	Track length L2(mm)	Effective stroke		A(mm)	N	M	P	Weight (kg)	
		C light-load single sliding block	D light-load two sliding blocks					C light-load single sliding block	D light-load two sliding blocks
213	150	83	35	25	2	4	50	1.48	1.61
263	200	133	85	50	2	4	100	1.73	1.87
363	300	233	185	50	3	6	200	1.99	2.13
463	400	333	285	50	4	8	300	2.25	2.39
563	500	433	385	50	5	10	400	2.51	2.65
663	600	533	485	50	6	12	500	2.77	2.91

AU65-LS-2L

AU-65 LEFT LIGHT LOAD No-covered type-2L

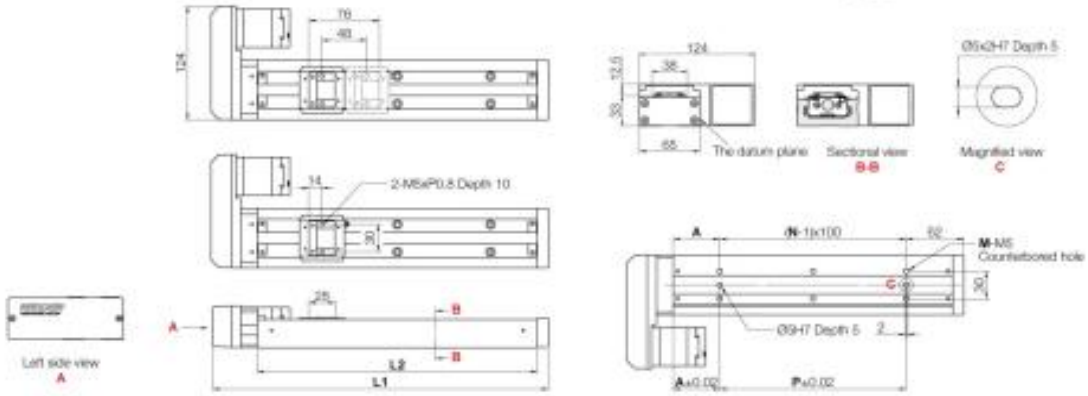

Total length L1(mm)	Track length L2(mm)	Effective stroke		A(mm)	N	M	P	Weight (kg)	
		C:light-load single sliding block	D:light-load two sliding blocks					C:light-load single sliding block	D:light-load two sliding blocks
213	150	83	35	25	2	4	50	1.48	1.61
263	200	133	85	50	2	4	100	1.73	1.87
363	300	233	185	50	3	6	200	1.99	2.13
463	400	333	285	50	4	8	300	2.25	2.39
563	500	433	385	50	5	10	400	2.51	2.65
663	600	533	485	50	6	12	500	2.77	2.91

AU65-LS-2R

AU-65 RIGHT LIGHT LOAD No-covered type-2R

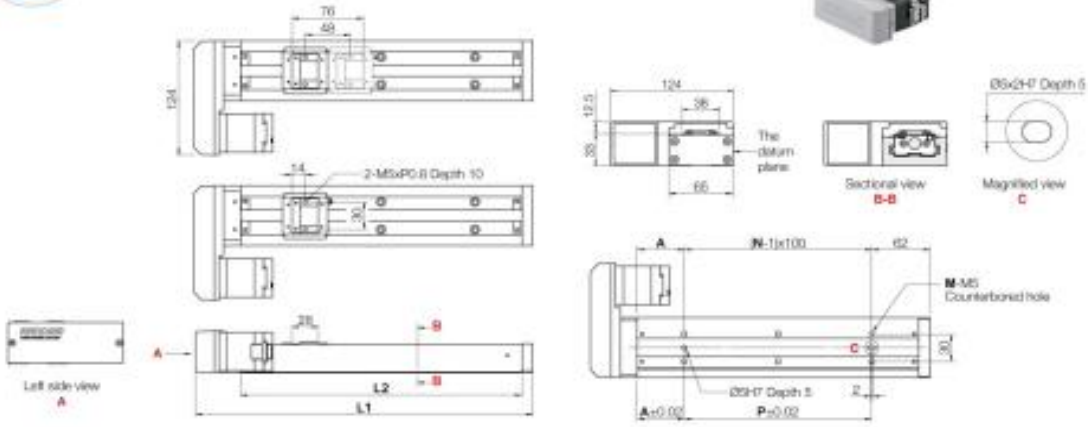

Total length L1(mm)	Track length L2(mm)	Effective stroke		A(mm)	N	M	P	Weight (kg)	
		C:light-load single sliding block	D:light-load two sliding blocks					C:light-load single sliding block	D:light-load two sliding blocks
213	150	83	35	25	2	4	50	1.48	1.61
263	200	133	85	50	2	4	100	1.73	1.87
363	300	233	185	50	3	6	200	1.99	2.13
463	400	333	285	50	4	8	300	2.25	2.39
563	500	433	385	50	5	10	400	2.51	2.65
663	600	533	485	50	6	12	500	2.77	2.91

AU65-H-2B

AU-65 BELOW Covered type-2B

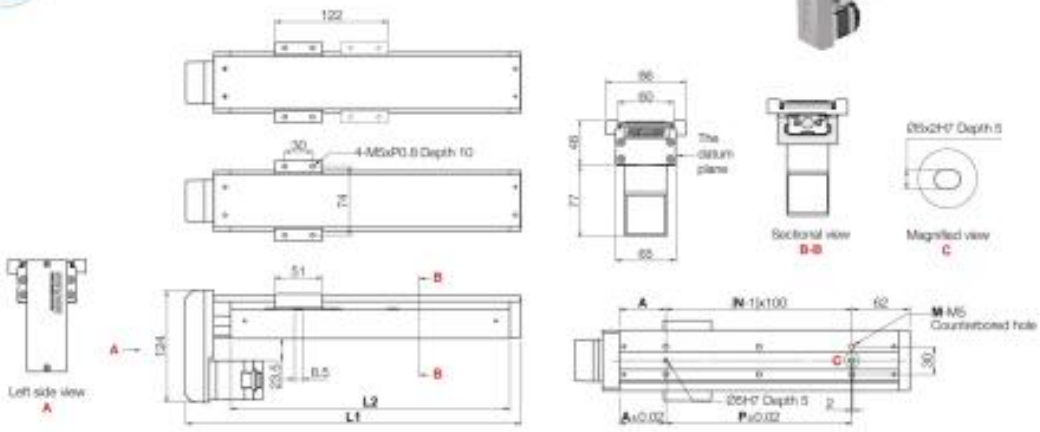

Total length L1(mm)	Track length L2(mm)	Effective stroke		A(mm)	N	M	P	Weight (kg)	
		A standard single sliding block	B standard two sliding blocks					A standard single sliding block	B standard two sliding blocks
213	150	60	-	25	2	4	50	1.78	-
263	200	110	-	50	2	4	100	2.04	-
363	300	210	139	50	3	6	200	2.30	2.43
463	400	310	239	50	4	8	300	2.56	2.69
563	500	410	339	50	5	10	400	2.82	2.95
663	600	510	439	50	6	12	500	3.08	3.21

AU65-H-2L

AU-65 LEFT Covered type-2L

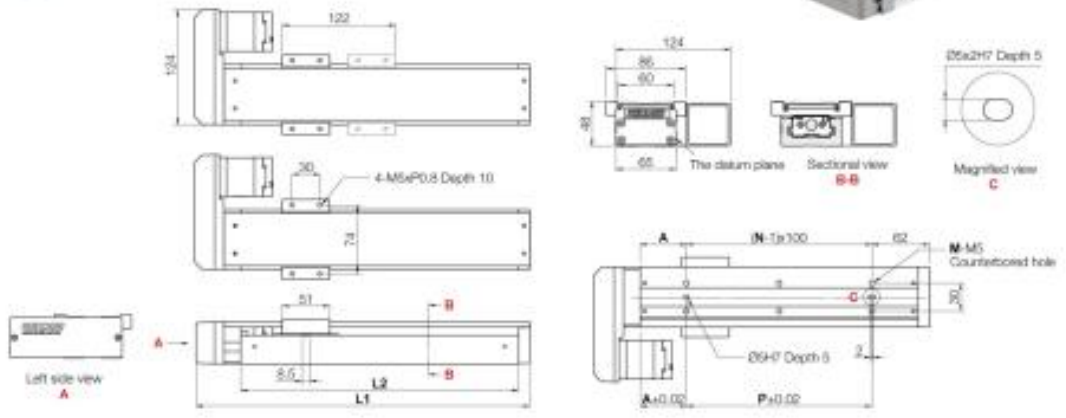

Total length L1(mm)	Track length L2(mm)	Effective stroke		A(mm)	N	M	P	Weight (kg)	
		A standard single sliding block	B standard two sliding blocks					A standard single sliding block	B standard two sliding blocks
213	150	60	-	25	2	4	50	1.78	-
263	200	110	-	50	2	4	100	2.04	-
363	300	210	139	50	3	6	200	2.30	2.43
463	400	310	239	50	4	8	300	2.56	2.69
563	500	410	339	50	5	10	400	2.82	2.95
663	600	510	439	50	6	12	500	3.08	3.21

AU65-H-2R

AU-65 RIGHT Covered type-2R

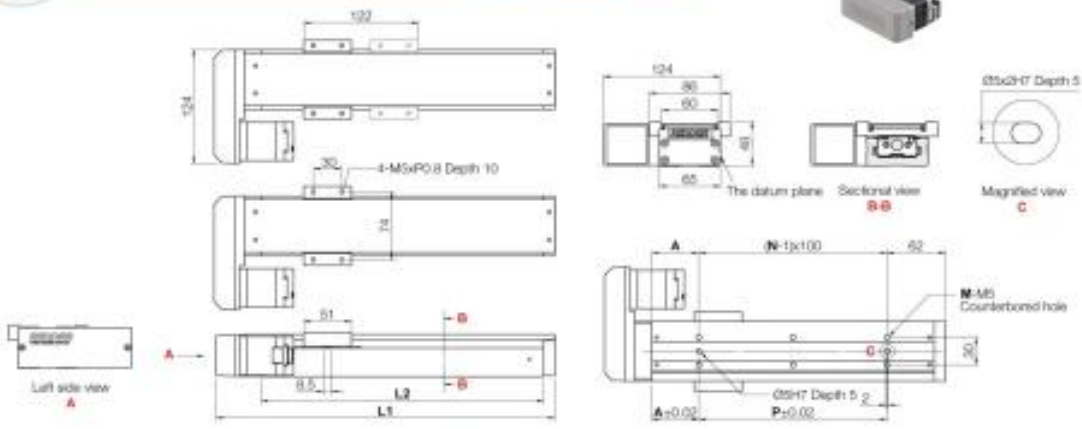

Total length L1(mm)	Track length L2(mm)	Effective stroke		A(mm)	N	M	P	Weight (kg)	
		A standard single sliding block	B standard two sliding blocks					A standard single sliding block	B standard two sliding blocks
213	150	60	-	25	2	4	50	1.78	-
263	200	110	-	50	2	4	100	2.04	-
363	300	210	139	50	3	6	200	2.30	2.43
463	400	310	239	50	4	8	300	2.56	2.69
563	500	410	339	50	5	10	400	2.82	2.95
663	600	510	439	50	6	12	500	3.08	3.21

AU65-HS-2B

AU-65 BELOW LIGHT LOAD Covered type-2B

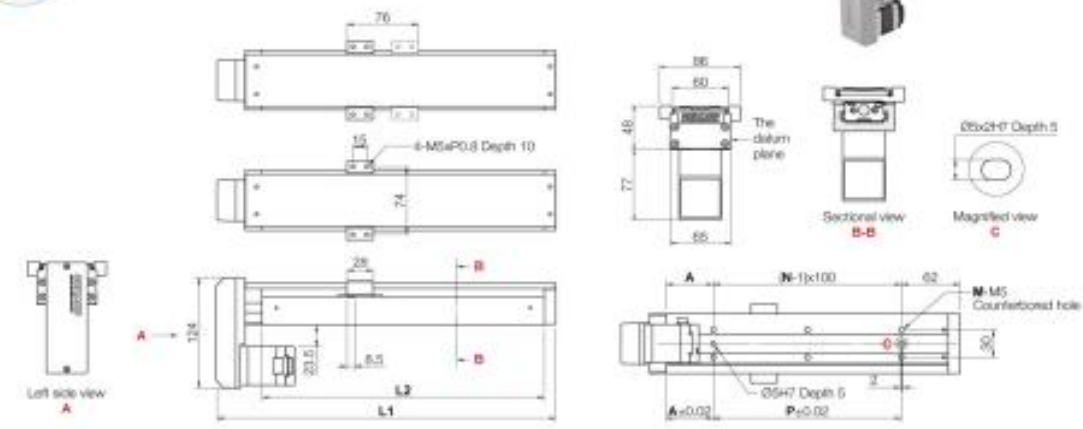

Total length L1(mm)	Track length L2(mm)	Effective stroke		A(mm)	N	M	P	Weight (kg)	
		C light-load single sliding block	D light-load two sliding blocks					C light-load single sliding block	D light-load two sliding blocks
213	150	83	35	25	2	4	50	1.35	1.50
263	200	133	85	50	2	4	100	1.61	1.76
363	300	233	185	50	3	6	200	1.87	2.02
463	400	333	285	50	4	8	300	2.13	2.28
563	500	433	385	50	5	10	400	2.39	2.54
663	600	533	485	50	6	12	500	2.65	2.80

AU65-HS-2L

AU-65 LEFT LIGHT LOAD Covered type -2L

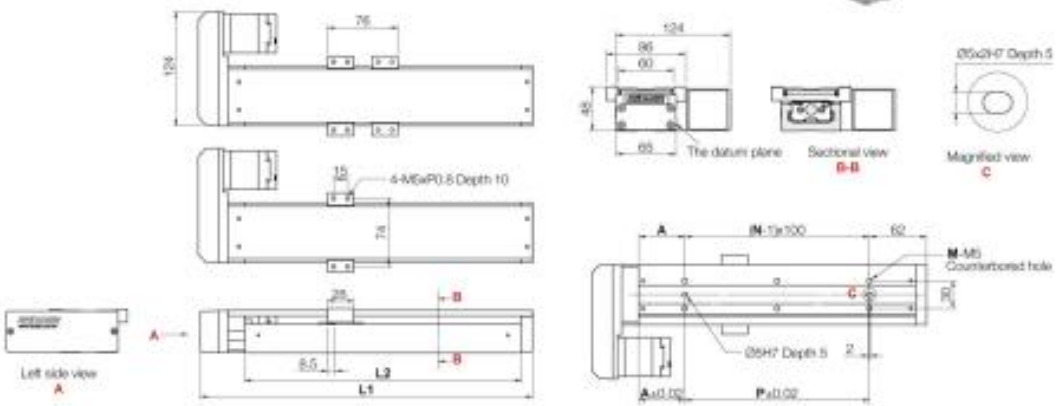

Total length L1(mm)	Track length L2(mm)	Effective stroke		A(mm)	N	M	P	Weight (kg)	
		C:light-load single sliding block	D:light-load two sliding blocks					C:light-load single sliding block	D:light-load two sliding blocks
213	150	83	35	25	2	4	50	1.35	1.50
263	200	133	85	50	2	4	100	1.61	1.76
363	300	233	185	50	3	6	200	1.87	2.02
463	400	333	285	50	4	8	300	2.13	2.28
563	500	433	385	50	5	10	400	2.39	2.54
663	600	533	485	50	6	12	500	2.65	2.80

AU65-HS-2R

AU-65 RIGHT LIGHT LOAD Covered type -2R

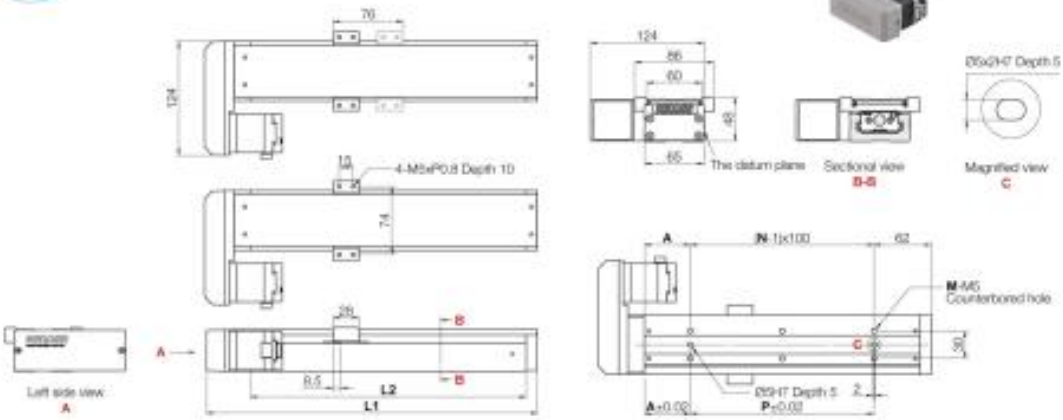

Total length L1(mm)	Track length L2(mm)	Effective stroke		A(mm)	N	M	P	Weight (kg)	
		C:light-load single sliding block	D:light-load two sliding blocks					C:light-load single sliding block	D:light-load two sliding blocks
213	150	83	35	25	2	4	50	1.35	1.50
263	200	133	85	50	2	4	100	1.61	1.76
363	300	233	185	50	3	6	200	1.87	2.02
463	400	333	285	50	4	8	300	2.13	2.28
563	500	433	385	50	5	10	400	2.39	2.54
663	600	533	485	50	6	12	500	2.65	2.80

AU-88 Electric Built-in Guideway Servo Actuator

Ball screw

Download

Motor rated output	200W, 400W		
Pitch / lead (mm) Ø16	5	10	20
Guideway rated dynamic load Ca (N)	2524	2524	2524
Guideway rated static load Coa (N)	34153	34153	34153
Repeatability (mm)	C grade : ±0.008 / P grade : ±0.003		
Horizotal thrust (Kg)	56	43	24
Vertical thrust (Kg)	22	13	5.6
Max. speed (mm/sec)	290	580	1000
Coupling (d1xd2)	6 mm x 14 mm		

UT-SERVO □56

Load and overhang length

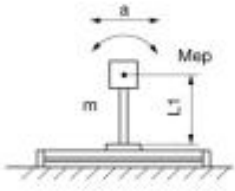

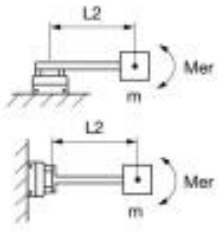

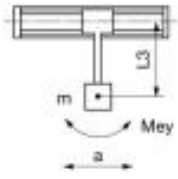

Horizotal installation
Load (Kg) and overhang length L1 (mm)

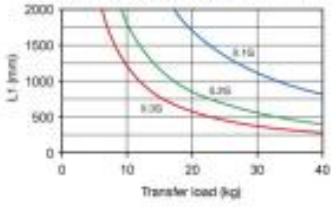

Horizotal / wall-mounted installation
Load (Kg) and overhang length L2 (mm)

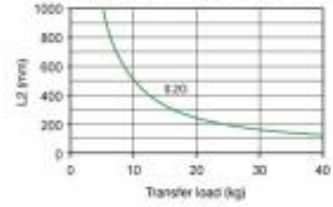

Wall-mounted installation
Load (Kg) and overhang length L3 (mm)

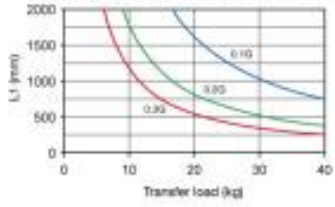

Center of gravity displacement of load moment

*Please appropriately reduce the motor speed to avoid vibration when actuator's stroke exceeds 800 mm

Static load moment table (N · m)

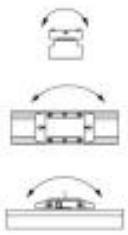

Unit : mm

Vertical installation		A	C
Pitch 5mm	12Kg	269	269
	18Kg	179	179
	24Kg	134	134
Pitch 10mm	5Kg	594	594
	7Kg	425	425
	9Kg	330	330
Pitch 20mm	2.5Kg	1144	1144
	4.0Kg	715	715
	5.5Kg	520	520

Unit : mm

Horizontal installation		A	B	C
Pitch 5mm	30Kg	739	109	166
	40Kg	530	78	119
	56Kg	350	51	79
Pitch 10mm	23Kg	695	170	227
	32Kg	444	109	145
	43Kg	291	71	95
Pitch 20mm	13Kg	918	270	337
	20Kg	579	170	213
	24Kg	475	140	174

Unit : mm

Wall-mounted installation		A	B	C
Pitch 5mm	25Kg	204	133	907
	35Kg	139	91	619
	48Kg	95	62	425
Pitch 10mm	20Kg	227	170	695
	25Kg	177	133	544
	30Kg	145	109	444
Pitch 20mm	12Kg	367	204	999
	18Kg	238	191	649
	20Kg	213	170	579

AU88-L-1

AU-88 STRAIGHT No-covered type -1

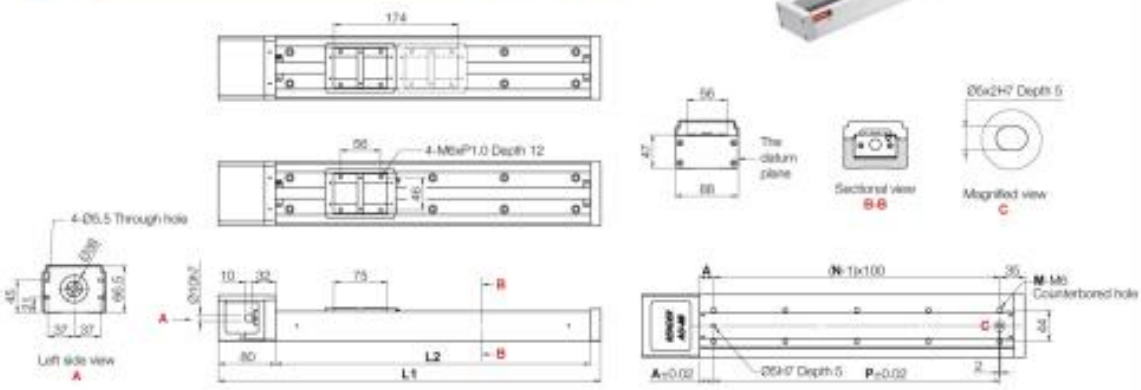

Total length L1(mm)	Track length L2(mm)	Effective stroke		A(mm)	N	M	P	Weight (kg)	
		A standard single sliding block	B standard two sliding blocks					A standard single sliding block	B standard two sliding blocks
436	340	222	123	20	4	8	300	4.22	4.91
536	440	322	223	20	5	10	400	4.86	5.55
636	540	422	323	20	6	12	500	5.50	6.19
736	640	522	423	20	7	14	600	6.12	6.80
836	740	622	523	20	8	16	700	6.79	7.47
936	840	722	623	20	9	18	800	7.43	8.11
1036	940	822	723	20	10	20	900	8.07	8.75

AU88-LS-1

AU-88 STRAIGHT LIGHT LOAD No-covered type -1

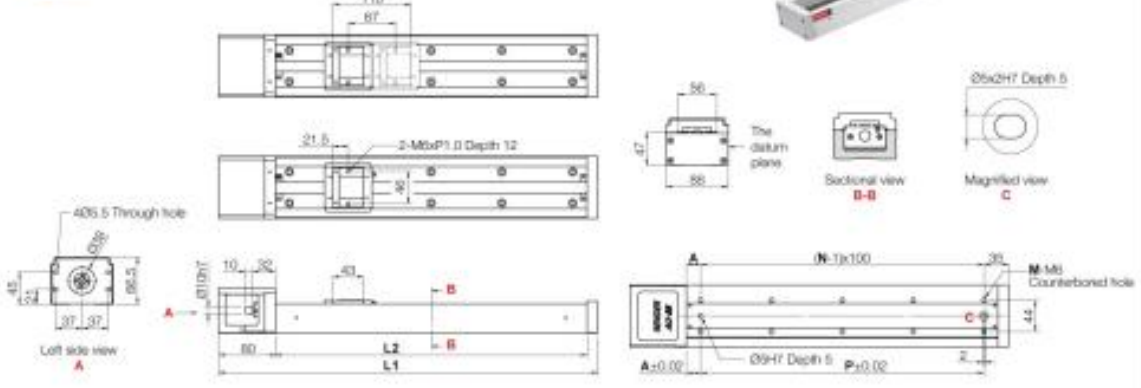

Total length L1(mm)	Track length L2(mm)	Effective stroke		A(mm)	N	M	P	Weight (kg)	
		C light-load single sliding block	D light-load two sliding blocks					C light-load single sliding block	D light-load two sliding blocks
436	340	254	187	20	4	8	300	3.78	4.18
536	440	354	287	20	5	10	400	4.43	4.82
636	540	454	387	20	6	12	500	5.07	5.46
736	640	554	487	20	7	14	600	5.68	6.07
836	740	654	587	70	8	16	700	6.35	6.47
936	840	754	687	20	9	18	800	6.99	7.38
1036	940	854	787	20	10	20	900	7.63	8.02

AU88-H-1

AU-88 STRAIGHT Covered type -1

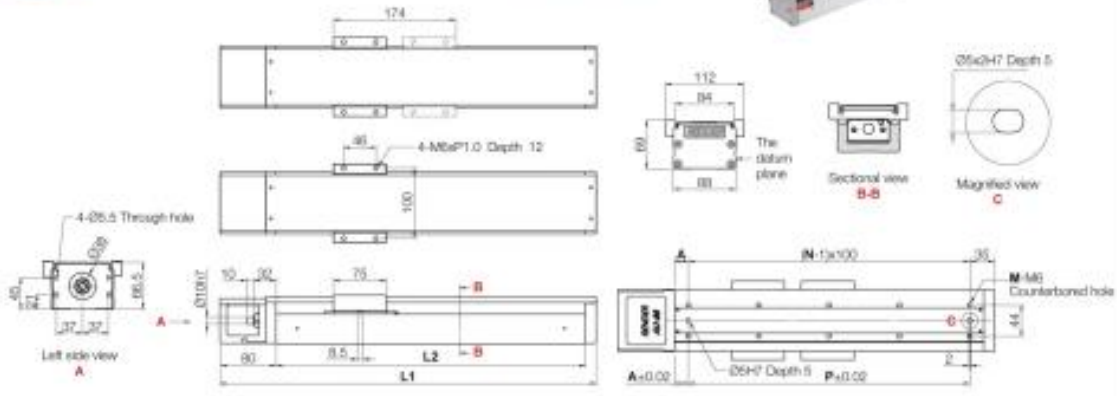

Total length L1(mm)	Track length L2(mm)	Effective stroke		A(mm)	N	M	P	Weight (kg)	
		A-standard single sliding block	B-standard two sliding blocks					A-standard single sliding block	B-standard two sliding blocks
436	340	222	123	20	4	8	300	4.66	5.35
536	440	322	223	20	5	10	400	5.37	6.05
636	540	422	323	20	6	12	500	6.08	6.76
736	640	522	423	20	7	14	600	6.75	7.44
836	740	622	523	20	8	16	700	7.49	8.17
936	840	722	623	20	9	18	800	8.20	8.88
1036	940	822	723	20	10	20	900	8.90	9.58

AU88-HS-1

AU-88 STRAIGHT LIGHT LOAD Covered type -1

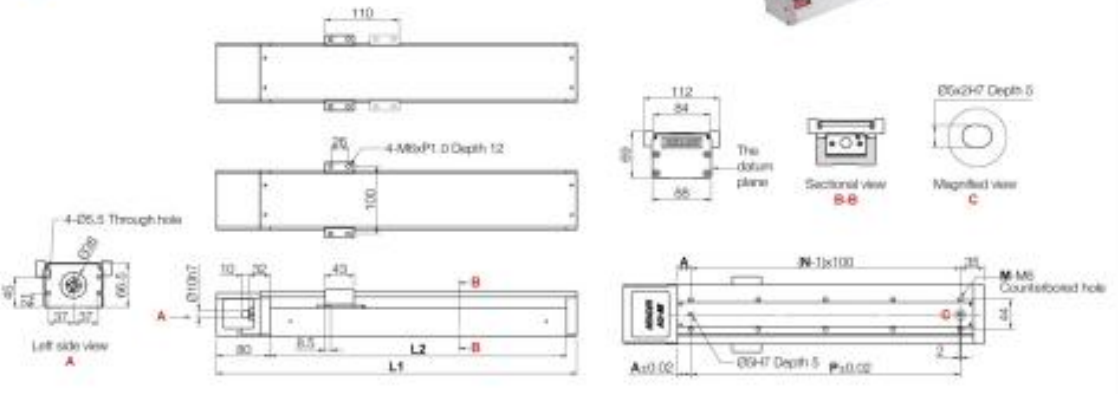

Total length L1(mm)	Track length L2(mm)	Effective stroke		A(mm)	N	M	P	Weight (kg)	
		C-light-load single sliding block	D-light-load two sliding blocks					C-light-load single sliding block	D-light-load two sliding blocks
436	340	254	187	20	4	8	300	4.23	4.62
535	440	354	287	20	5	10	400	4.93	5.33
636	540	454	387	20	6	12	500	5.64	6.03
736	640	554	487	20	7	14	600	6.31	6.71
836	740	654	587	20	8	16	700	7.05	7.44
936	840	754	687	20	9	18	800	7.75	8.15
1036	940	854	787	20	10	20	900	8.46	8.85

AU88-L-2B

AU-88 BELOW No-covered type-2B

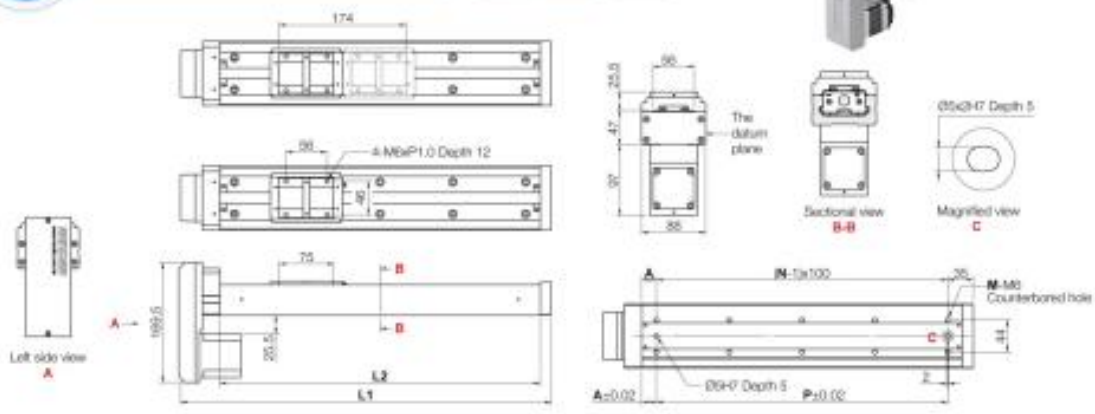

Total length L1(mm)	Track length L2(mm)	Effective stroke		A(mm)	N	M	P	Weight (kg)	
		A standard single sliding block	B standard two sliding blocks					A standard single sliding block	B standard two sliding blocks
413	340	222	123	20	4	8	300	4.01	4.45
513	440	322	223	20	5	10	400	4.72	5.09
613	540	422	323	20	6	12	500	5.42	5.73
713	640	522	423	20	7	14	600	6.13	6.37
813	740	622	523	20	8	16	700	6.83	7.01
913	840	722	623	20	9	18	800	7.54	7.65
1013	940	822	723	20	10	20	900	8.24	8.29

AU88-L-2L

AU-88 LEFT No-covered type-2L

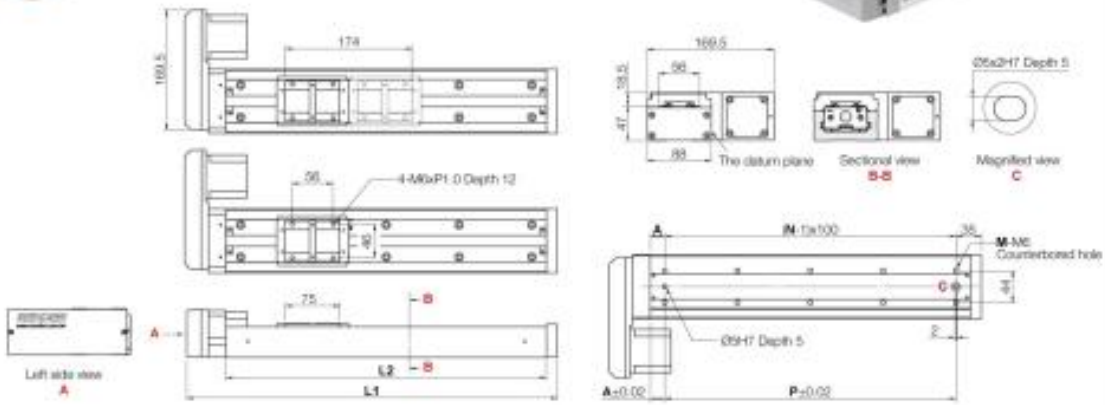

Total length L1(mm)	Track length L2(mm)	Effective stroke		A(mm)	N	M	P	Weight (kg)	
		A standard single sliding block	B standard two sliding blocks					A standard single sliding block	B standard two sliding blocks
413	340	222	123	20	4	8	300	4.01	4.45
513	440	322	223	20	5	10	400	4.72	5.09
613	540	422	323	20	6	12	500	5.42	5.73
713	640	522	423	20	7	14	600	6.13	6.37
813	740	622	523	20	8	16	700	6.83	7.01
913	840	722	623	20	9	18	800	7.54	7.65
1013	940	822	723	20	10	20	900	8.24	8.29

AU88-L-2R

AU-88 RIGHT No-covered type-2R

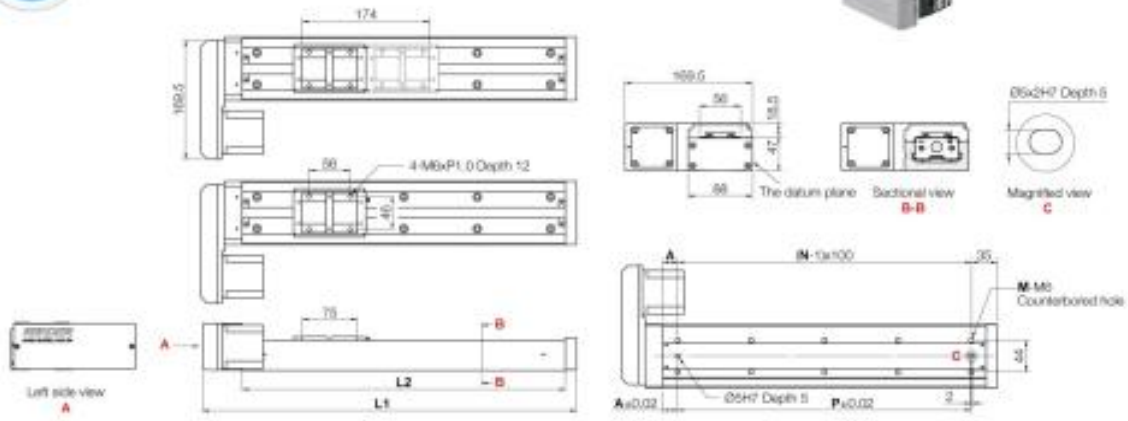

Total length L1(mm)	Track length L2(mm)	Effective stroke		A(mm)	N	M	P	Weight (kg)	
		A standard single sliding block	B standard two sliding blocks					A standard single sliding block	B standard two sliding blocks
413	340	222	123	20	4	8	300	4.01	4.45
513	440	322	223	20	5	10	400	4.72	5.09
613	540	422	323	20	6	12	500	5.42	5.73
713	640	522	423	20	7	14	600	6.13	6.37
813	740	622	523	20	8	16	700	6.83	7.01
913	840	722	623	20	9	18	800	7.54	7.65
1013	940	822	723	20	10	20	900	8.24	8.29

AU88-LS-2B

AU-88 BELOW LIGHT LOAD No-covered type-2B

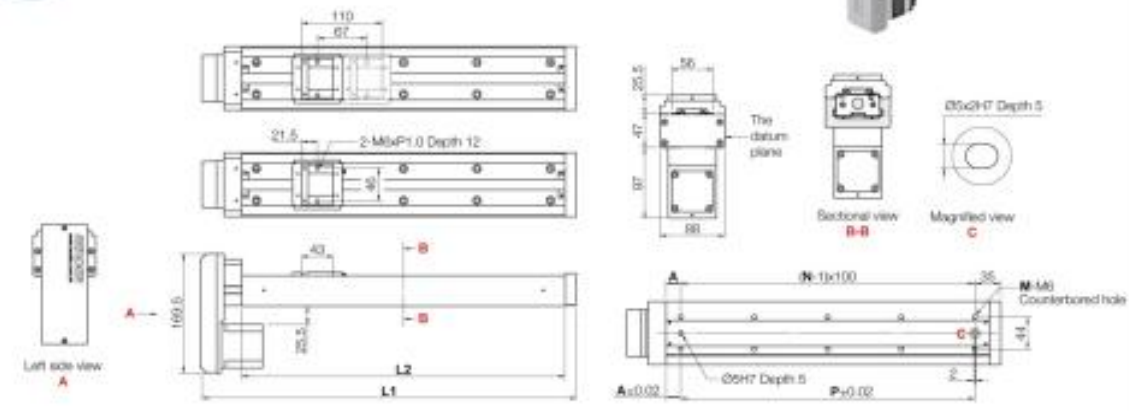

Total length L1(mm)	Track length L2(mm)	Effective stroke		A(mm)	N	M	P	Weight (kg)	
		C light-load single sliding block	D light-load two sliding blocks					C light-load single sliding block	D light-load two sliding blocks
413	340	254	187	20	4	8	300	3.33	3.72
513	440	354	287	20	5	10	400	3.97	4.36
613	540	454	387	20	6	12	500	4.61	5.00
713	640	554	487	20	7	14	600	5.25	5.64
813	740	654	587	20	8	16	700	5.89	6.28
913	840	754	687	20	9	18	800	6.53	6.90
1013	940	854	787	20	10	20	900	7.17	7.56

AU88-LS-2L

AU-88 LEFT LIGHT LOAD No-covered type-2L

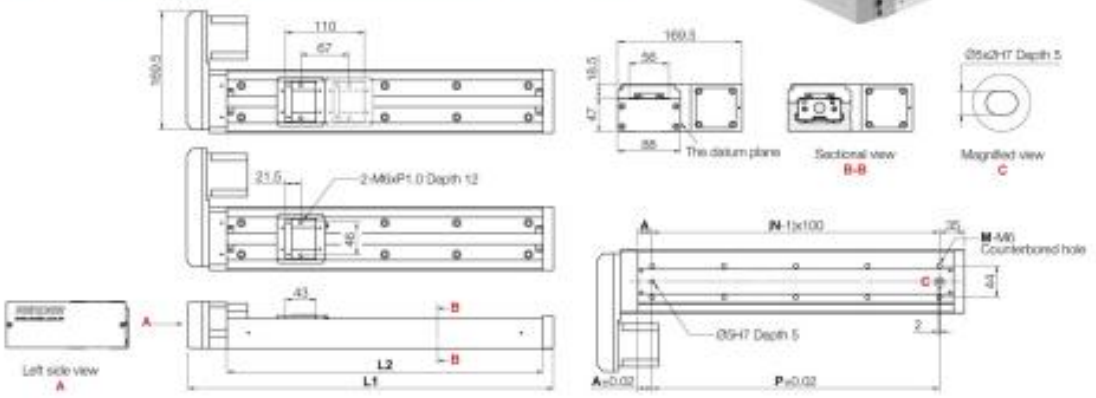

Total length L1(mm)	Track length L2(mm)	Effective stroke		A(mm)	N	M	P	Weight (kg)	
		C:light-load single sliding block	D:light-load two sliding blocks					C:light-load single sliding block	D:light-load two sliding blocks
413	340	254	187	20	4	8	300	3.33	3.72
513	440	354	287	20	5	10	400	3.97	4.36
613	540	454	387	20	6	12	500	4.61	5.00
713	640	554	487	20	7	14	600	5.25	5.64
813	740	654	587	20	8	16	700	5.89	6.28
913	840	754	687	20	9	18	800	6.53	6.90
1013	940	854	787	20	10	20	900	7.17	7.56

AU88-LS-2R

AU-88 RIGHT LIGHT LOAD No-covered type-2R

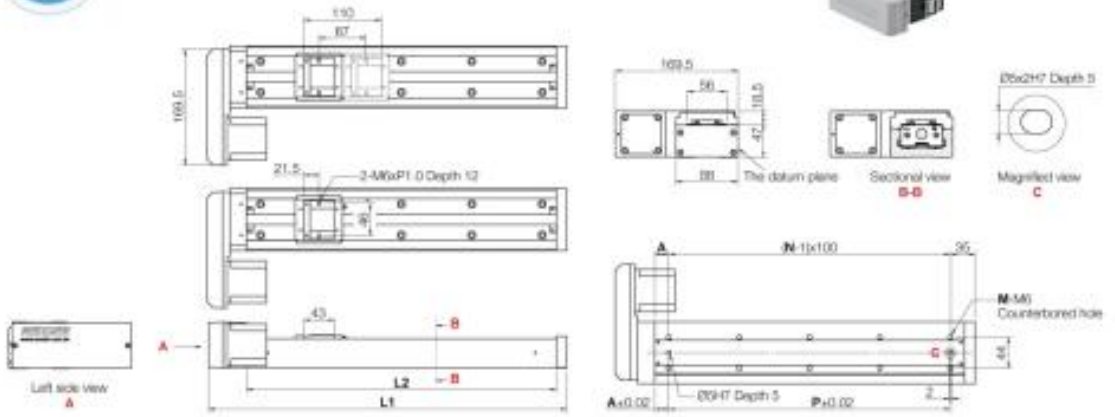

Total length L1(mm)	Track length L2(mm)	Effective stroke		A(mm)	N	M	P	Weight (kg)	
		C:light-load single sliding block	D:light-load two sliding blocks					C:light-load single sliding block	D:light-load two sliding blocks
413	340	254	187	20	4	8	300	3.33	3.72
513	440	354	287	20	5	10	400	3.97	4.36
613	540	454	387	20	6	12	500	4.61	5.00
713	640	554	487	20	7	14	600	5.25	5.64
813	740	654	587	20	8	16	700	5.89	6.28
913	840	754	687	20	9	18	800	6.53	6.90
1013	940	854	787	20	10	20	900	7.17	7.56

AU88-H-2B

AU-88 BELOW Covered type-2B

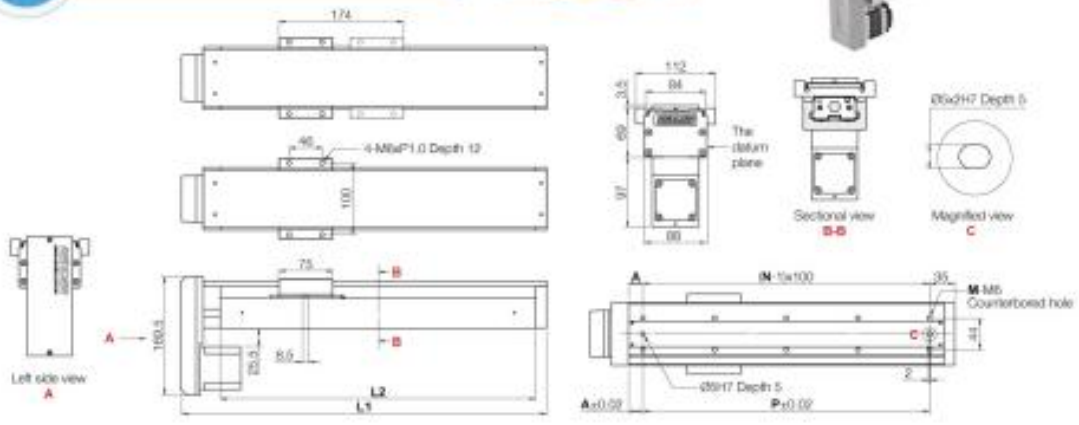

Total length L1(mm)	Track length L2(mm)	Effective stroke		A(mm)	N	M	P	Weight (kg)	
		A standard single sliding block	B standard two sliding blocks					A standard single sliding block	B standard two sliding blocks
413	340	222	123	20	4	8	300	4.21	4.90
513	440	322	223	20	5	10	400	4.92	5.60
613	540	422	323	20	6	12	500	5.62	6.31
713	640	522	423	20	7	14	600	6.32	7.01
813	740	622	523	20	8	16	700	7.03	7.72
913	840	722	623	20	9	18	800	7.74	8.42
1013	940	822	723	20	10	20	900	8.45	9.13

AU88-H-2L

AU-88 LEFT Covered type-2L

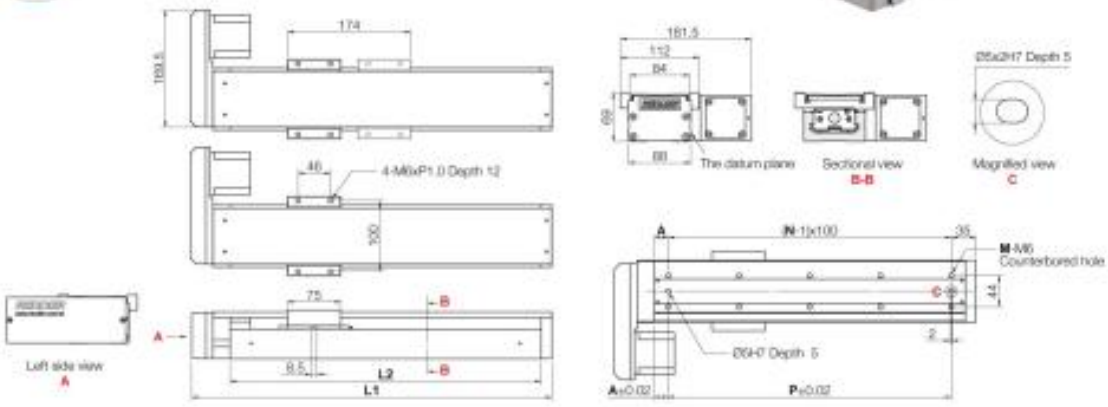

Total length L1(mm)	Track length L2(mm)	Effective stroke		A(mm)	N	M	P	Weight (kg)	
		A standard single sliding block	B standard two sliding blocks					A standard single sliding block	B standard two sliding blocks
413	340	222	123	20	4	8	300	4.21	4.90
513	440	322	223	20	5	10	400	4.92	5.60
613	540	422	323	20	6	12	500	5.62	6.31
713	640	522	423	20	7	14	600	6.32	7.01
813	740	622	523	20	8	16	700	7.03	7.72
913	840	722	623	20	9	18	800	7.74	8.42
1013	940	822	723	20	10	20	900	8.45	9.13

AU88-H-2R

AU-88 RIGHT Covered type-2R

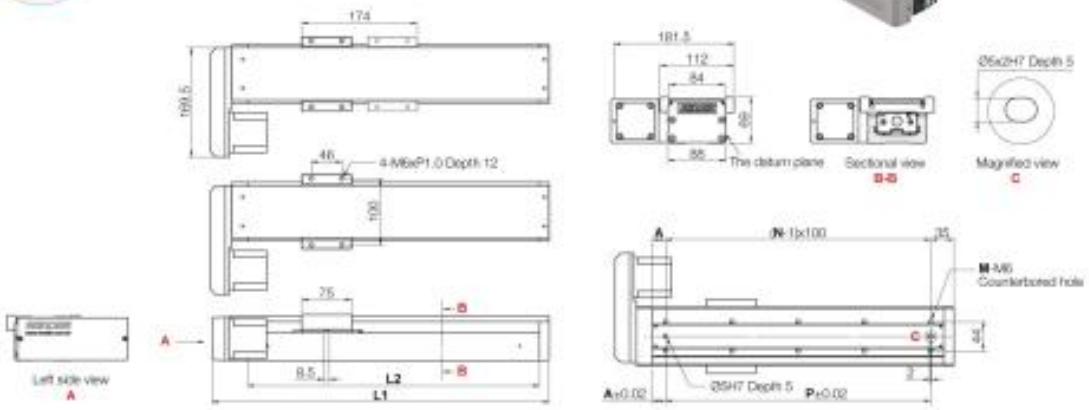

Total length L1(mm)	Track length L2(mm)	Effective stroke		A(mm)	N	M	P	Weight (kg)	
		A standard single sliding block	B standard two sliding blocks					A standard single sliding block	B standard two sliding blocks
413	340	222	123	20	4	8	300	4.21	4.90
513	440	322	223	20	5	10	400	4.92	5.60
613	540	422	323	20	6	12	500	5.62	6.31
713	640	522	423	20	7	14	600	6.32	7.01
813	740	622	523	20	8	16	700	7.03	7.72
913	840	722	623	20	9	18	800	7.74	8.42
1013	940	822	723	20	10	20	900	8.45	9.13

AU88-HS-2B

AU-88 BELOW LIGHT LOAD Covered type-2B

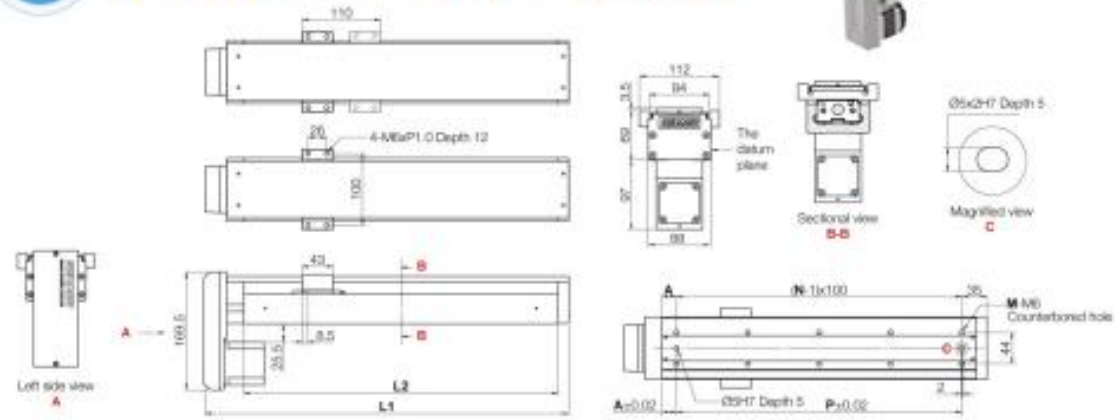

Total length L1(mm)	Track length L2(mm)	Effective stroke		A(mm)	N	M	P	Weight (kg)	
		C light-load single sliding block	D light-load two sliding blocks					C light-load single sliding block	D light-load two sliding blocks
413	340	254	187	20	4	8	300	3.77	4.17
513	440	354	287	20	5	10	400	4.48	4.87
613	540	454	387	20	6	12	500	5.18	5.58
713	640	554	487	20	7	14	600	5.88	6.28
813	740	654	587	20	8	16	700	6.60	7.00
913	840	754	687	20	9	18	800	7.30	7.69
1013	940	854	787	20	10	20	900	8.00	8.40

AU88-HS-2L

AU-88 LEFT LIGHT LOAD Covered type-2L

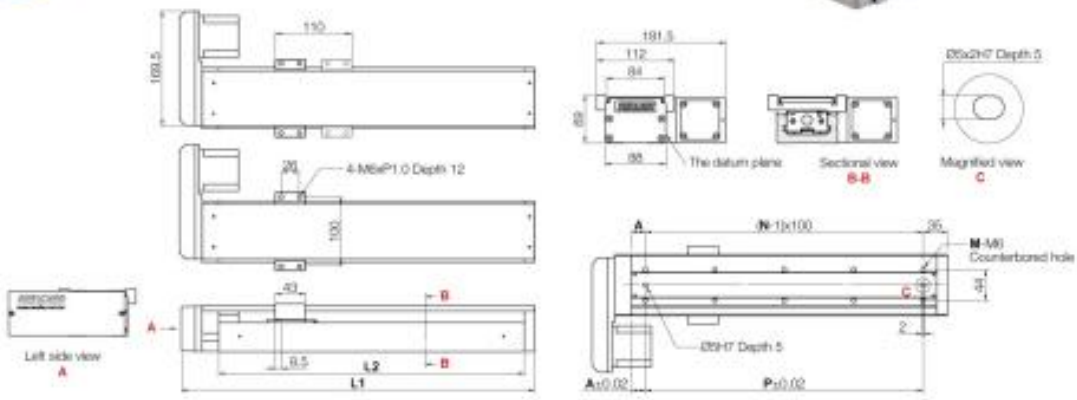

Total length L1(mm)	Track length L2(mm)	Effective stroke		A(mm)	N	M	P	Weight (kg)	
		D light-load single sliding block	D light-load two sliding blocks					D light-load single sliding block	D light-load two sliding blocks
413	340	254	187	20	4	8	300	3.77	4.17
513	440	354	287	20	5	10	400	4.48	4.87
613	540	454	387	20	6	12	500	5.18	5.58
713	640	554	487	20	7	14	600	5.88	6.28
813	740	654	587	20	8	16	700	6.60	7.00
913	840	754	687	20	9	18	800	7.30	7.69
1013	940	854	787	20	10	20	900	8.00	8.40

AU88-HS-2R

AU-88 RIGHT LIGHT LOAD Covered type-2R

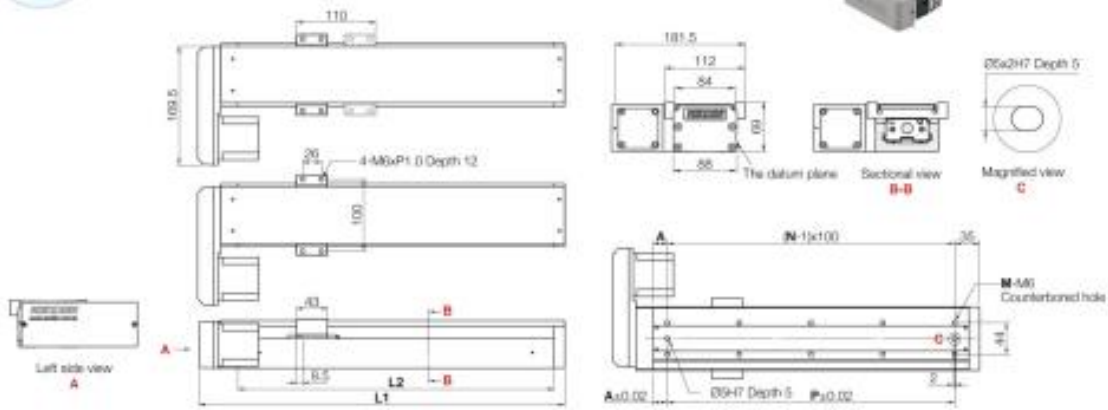

Total length L1(mm)	Track length L2(mm)	Effective stroke		A(mm)	N	M	P	Weight (kg)	
		D light-load single sliding block	D light-load two sliding blocks					D light-load single sliding block	D light-load two sliding blocks
413	340	254	187	20	4	8	300	3.77	4.17
513	440	354	287	20	5	10	400	4.48	4.87
613	540	454	387	20	6	12	500	5.18	5.58
713	640	554	487	20	7	14	600	5.88	6.28
813	740	654	587	20	8	16	700	6.60	7.00
913	840	754	687	20	9	18	800	7.30	7.69
1013	940	854	787	20	10	20	900	8.00	8.40

Clean Room Built-in Guideway Ball Screw Servo Actuator

AUS series are innovatively developed products. The linear guide and the ball screw are intergrated into a U-shaped design, improving structual rigidity, reducing assembly tolerances, and greatly reducing the volume

- The dust-proof steel belt design can prevent foreign matter pollution and dust intrusion.
- Can be locked from top to bottom without removing the steel belt.

AUS-45 Micro Actuator

1. Application Motor: AC30W / DC □28
2. Effective Stroke : 50 mm ~ 500 mm
3. Max. Speed : 150 mm/sec
4. Max. Load : 24 kg
5. Cross-sectional area WxH : 45 mm x 40 mm

AUS-55 Small Actuator

1. Application Motor: AC50W / DC □35
2. Effective Stroke : 50 mm ~ 600 mm
3. Max. Speed : 580 mm/sec
4. Max. Load : 40 kg
5. Cross-sectional area WxH : 55 mm x 48 mm

AUS-65 Medium Actuator

1. Application Motor: AC100W / DC □42
2. Effective Stroke : 50 mm ~ 800 mm
3. Max. Speed : 580 mm/sec
4. Max. Load : 45 kg
5. Cross-sectional area WxH : 65 mm x 55 mm

AUS-88 Large Actuator

1. Application Motor: AC200W,400W / DC □56
2. Effective Stroke : 50 mm ~ 1100 mm
3. Max. Speed : 1000 mm/sec
4. Max. Load : 56 kg
5. Cross-sectional area WxH : 85 mm x 71 mm

AUS | 45 | - | P | - | S50 | - | 1 | CS3L | - | MUT4501 | - | K1

Introduction

AUS	Product code	Electric built-in guideway servo actuator • ball screw driven
45	Body width	**45** : 45mm **55** : 55mm **65** : 65mm **88** : 88mm
-P	Pitch (lead)	**mm**
-S50	Effective stroke	Stroke interval : **50 mm**
-1	Motor orientation	**1** : Straight **2B** : Below **2L** : Left **2R** : Right
C	Accuracy	**C** : General **P** : Precise
S3L	Sensor location	**S0** : No Sensor **S1** : Only home point **S2** : Only L⁻, L⁺points **S3** : With 3 Sensors **L** : Externally on the left **R** : Externally on the right
-MUT	Flange fixing board	**M0** : No motor and motor flange **MS** : Servo motor **MUT** : UT-Servo motor **MT** : Stepping motor
-K1	Coupling	**K0** : No coupling **K1** : With coupling

AUS-45 Electric Built-in Guideway Servo Actuator

Ball screw

2D, 3D Download

Motor rated output	30W	
Pitch / lead (mm) Ø8	1	2.5
Guideway rated dynamic load Ca (N)	1081	1081
Guideway rated static load Coa (N)	13583	13583
Repeatability (mm)	C grade : ±0.008 / P grade : ±0.003	
Horizotal thrust (Kg)	24	24
Vertical thrust (Kg)	3.5	7.5
Max. speed (mm/sec)	60	150
Effective stroke	50 mm ~ 500 mm	
Coupling (d1xd2)	5 mm x 5 mm	

UT-SERVO □28

Load and overhang length

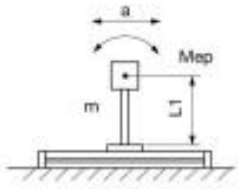

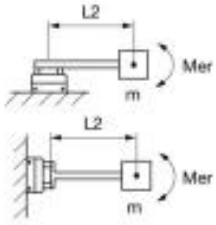

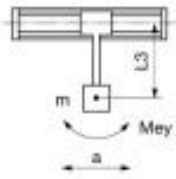

Horizotal installation
Load (Kg) and overhang length L1 (mm)

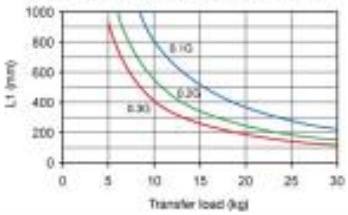

Horizotal / wall-mounted installation
Load (Kg) and overhang length L2 (mm)

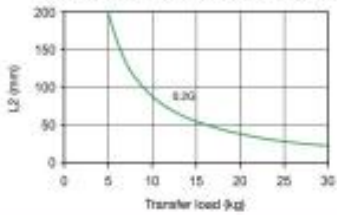

Wall-mounted installation
Load (Kg) and overhang length L3 (mm)

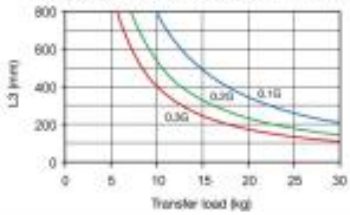

Center of gravity displacement of load moment

*Please appropriately reduce the motor speed to avoid vibration when actuator's stroke exceeds 300 mm

Dynamic load moment table (N · m)

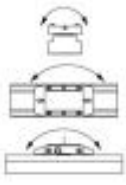

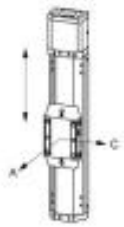

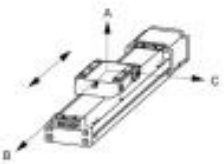

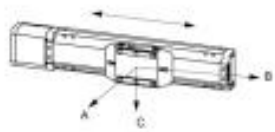

Static load moment table (N · m)

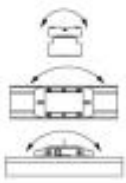

Unit : mm

Vertical installation		A	C
Pitch 1mm	2.5Kg	328	328
	3.0Kg	273	273
	3.5Kg	234	234
Pitch 2.5mm	4.0Kg	205	205
	6.0Kg	137	137
	7.5Kg	109	109

Unit : mm

Horizontal installation		A	B	C
Pitch 1mm	12Kg	680	67	84
	18Kg	425	42	53
	24Kg	298	29	37
Pitch 2.5mm	10Kg	833	82	103
	18Kg	425	42	53
	24Kg	298	29	37

Unit : mm

Wall-mounted installation		A	B	C
Pitch 1mm	12Kg	82	65	663
	18Kg	51	40	406
	24Kg	35	28	281
Pitch 2.5mm	15Kg	63	50	510
	20Kg	44	35	357
	24Kg	35	28	281

* Calculation basis of dynamic rated load : The sliding block's service life is 10,000km

AUS-45 • STRAIGHT • Specification Table-1

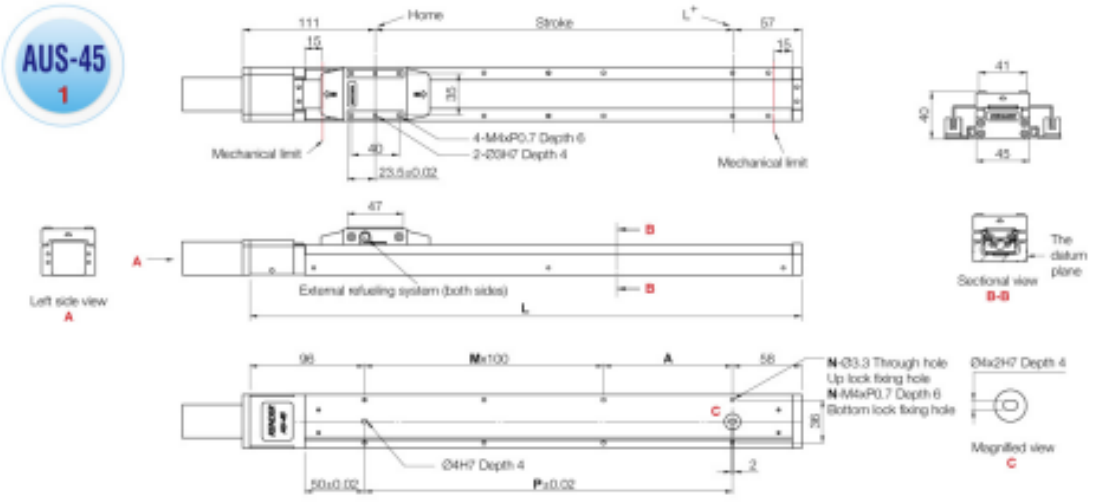

Stroke	50	100	150	200	250	300	350	400	450	500
L	212	262	312	362	412	462	512	562	612	662
A	58	108	58	108	58	108	58	108	58	108
P	58	108	158	208	258	308	358	408	458	508
M	-	-	1	1	2	2	4	4	5	5
N	4	4	6	6	8	8	10	10	12	12
Weight (kg)	0.8	0.9	1.0	1.1	1.2	1.3	1.4	1.5	1.6	1.7

AUS-45 • BELOW • Specification Table -2B

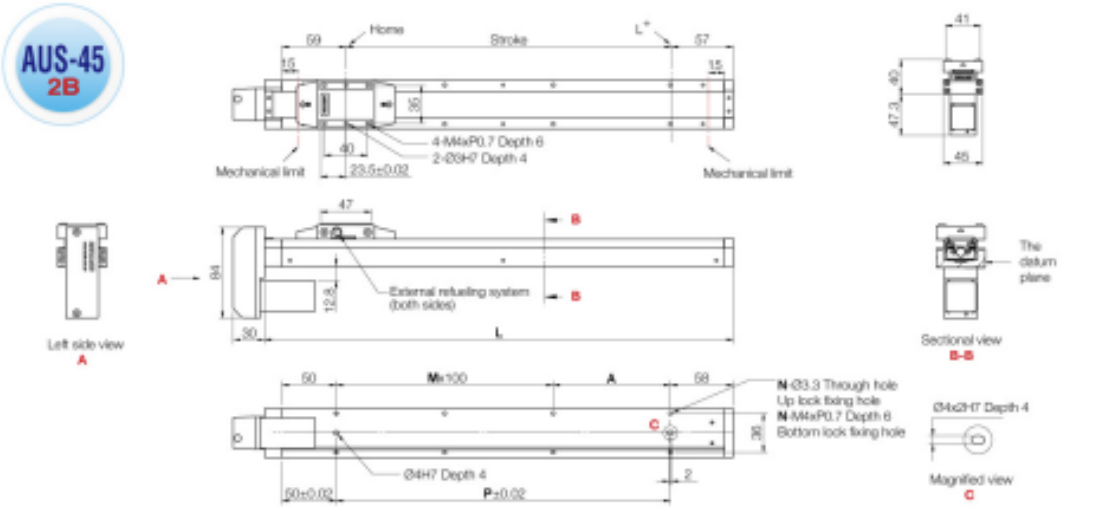

Stroke	50	100	150	200	250	300	350	400	450	500
L	182	232	282	332	382	432	482	532	582	632
A	58	108	58	108	58	108	58	108	58	108
P	58	108	158	208	258	308	358	408	458	508
M	-	-	1	1	2	2	4	4	5	5
N	4	4	6	6	8	8	10	10	12	12
Weight (kg)	0.7	0.8	0.9	1.0	1.1	1.2	1.3	1.4	1.5	1.6

AUS-45 • LEFT • Specification Table-2L

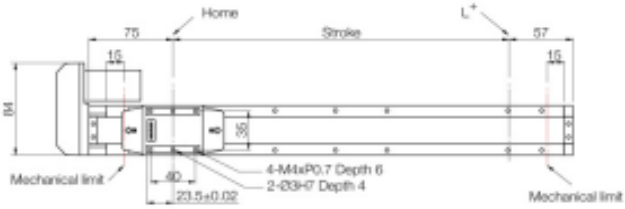

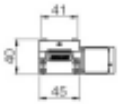

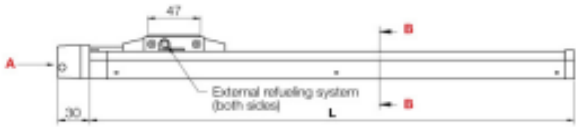

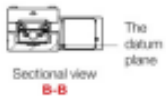

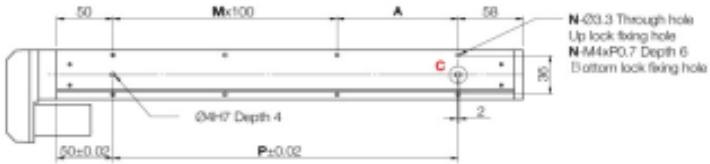

Stroke	50	100	150	200	250	300	350	400	450	500
L	182	232	282	332	382	432	482	532	582	632
A	58	108	58	108	58	108	58	108	58	108
P	58	108	158	208	258	308	358	408	458	508
M	-	-	1	1	2	2	4	4	5	5
N	4	4	6	6	8	8	10	10	12	12
Weight (kg)	0.7	0.8	0.9	1.0	1.1	1.2	1.3	1.4	1.5	1.6

AUS-45 • RIGHT • Specification Table-2R

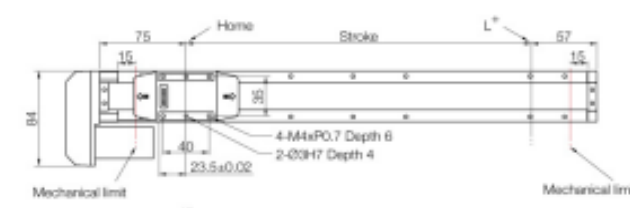

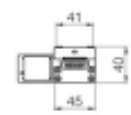

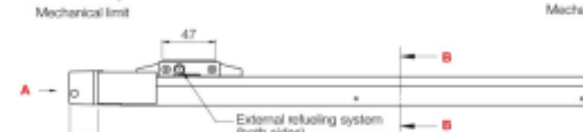

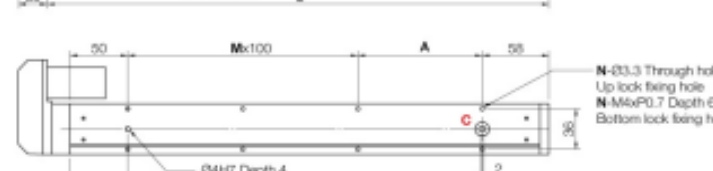

Stroke	50	100	150	200	250	300	350	400	450	500
L	182	232	282	332	382	432	482	532	582	632
A	58	108	58	108	58	108	58	108	58	108
P	58	108	158	208	258	308	358	408	458	508
M	-	-	1	1	2	2	4	4	5	5
N	4	4	6	6	8	8	10	10	12	12
Weight (kg)	0.7	0.8	0.9	1.0	1.1	1.2	1.3	1.4	1.5	1.6

AUS-55 Electric Built-in Guideway Servo Actuator

Ball screw

Download

Motor rated output	50W		
Pitch / lead (mm) Ø10	2	5	10
Guideway rated dynamic load Ca (N)	1262	1262	1262
Guideway rated static load Coa (N)	16720	16720	16720
Repeatability (mm)	C grade : ±0.008 / P grade : ±0.003		
Horizotal thrust (Kg)	40	28	15
Vertical thrust (Kg)	15	9	3.2
Max. speed (mm/sec)	120	290	580
Effective stroke	50 mm ~ 600 mm		
Coupling (d1xd2)	5 mm x 6 mm		

Load and overhang length

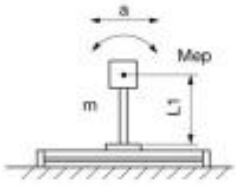

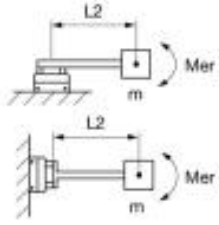

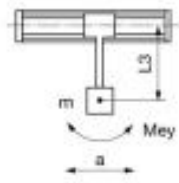

Horizotal installation
Load (Kg) and overhang length L1 (mm)

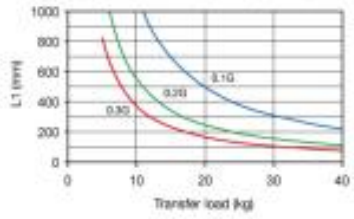

Horizotal / wall-mounted installation
Load (Kg) and overhang length L2 (mm)

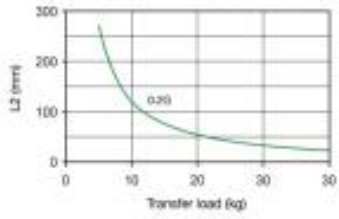

Wall-mounted installation
Load (Kg) and overhang length L3 (mm)

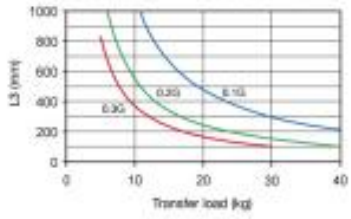

Center of gravity displacement of load moment

*Please appropriately reduce the motor speed to avoid vibration when actuator's stroke exceeds 300 mm

Dynamic load moment table (N · m)

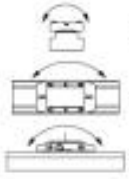

Static load moment table (N · m)

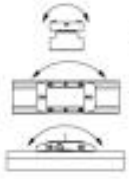

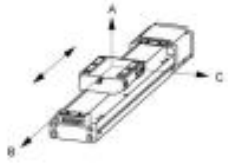

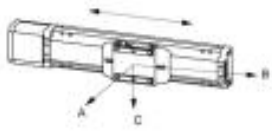

Unit : mm

Vertical installation		A	C
Pitch 2mm	7.0Kg	156	156
	10.0Kg	109	109
	15.0Kg	73	73
Pitch 5mm	7.0Kg	149	149
	13.0Kg	80	80
	15.0Kg	70	70
Pitch 10mm	0.8Kg	1205	1205
	1.6Kg	602	602
	3.2Kg	301	301

Unit : mm

Horizontal installation		A	B	C
Pitch 2mm	20Kg	515	50	72
	30Kg	311	30	44
	40Kg	209	20	29
Pitch 5mm	20Kg	343	50	68
	30Kg	207	30	41
	40Kg	139	20	27
Pitch 10mm	15Kg	288	70	83
	25Kg	157	38	46
	40Kg	84	20	24

Unit : mm

Wall-mounted installation		A	B	C
Pitch 2mm	10Kg	156	109	1108
	20Kg	70	49	496
	30Kg	41	29	292
Pitch 5mm	10Kg	145	109	739
	20Kg	65	49	331
	30Kg	38	29	194
Pitch 10mm	5Kg	271	229	933
	10Kg	129	109	443
	15Kg	81	69	280

◆Calculation basis of dynamic rated load : The sliding block's service life is 10,000km

AUS-55 • STRAIGHT • Specification Table-1

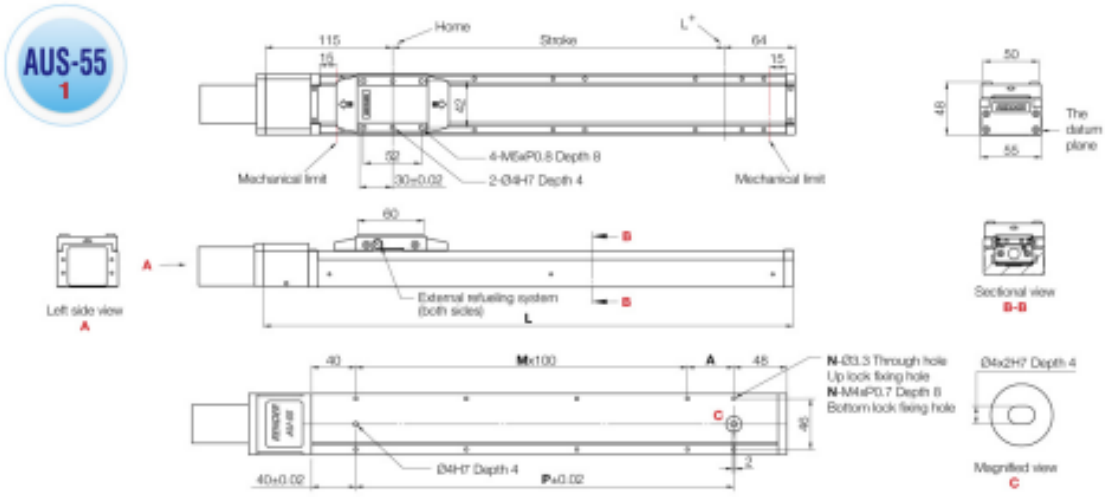

Stroke	50	100	150	200	250	300	350	400	450	500	550	600
L	229	279	329	379	429	479	529	579	629	679	729	779
A	92	42	92	42	92	42	92	42	92	42	92	42
P	92	142	192	242	292	342	392	442	492	542	592	642
M	-	1	1	2	2	3	3	4	4	5	5	6
N	4	6	6	8	8	10	10	12	12	14	14	16
Weight (kg)	1.4	1.5	1.6	1.7	1.9	2.0	2.2	2.3	2.4	2.6	2.7	2.8

AUS-55 • BELOW • Specification Table-2B

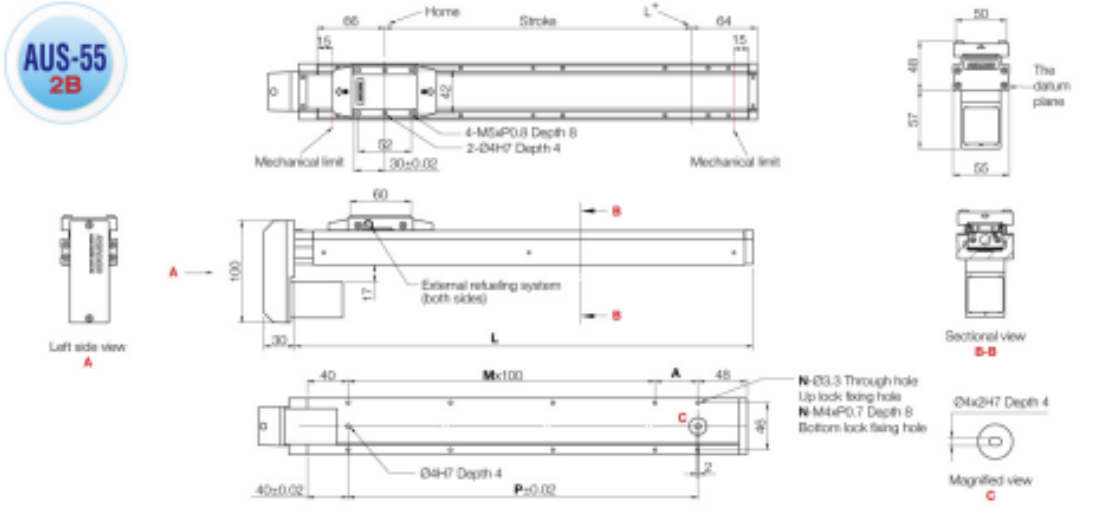

Stroke	50	100	150	200	250	300	350	400	450	500	550	600
L	198	248	298	348	398	448	498	548	598	648	698	748
A	92	42	92	42	92	42	92	42	92	42	92	42
P	92	142	192	242	292	342	392	442	492	542	592	642
M	-	1	1	2	2	3	3	4	4	5	5	6
N	4	6	6	8	8	10	10	12	12	14	14	16
Weight (kg)	1.4	1.5	1.6	1.7	1.9	2.0	2.2	2.3	2.4	2.6	2.7	2.8

AUS-55 • LEFT • Specification Table -2L

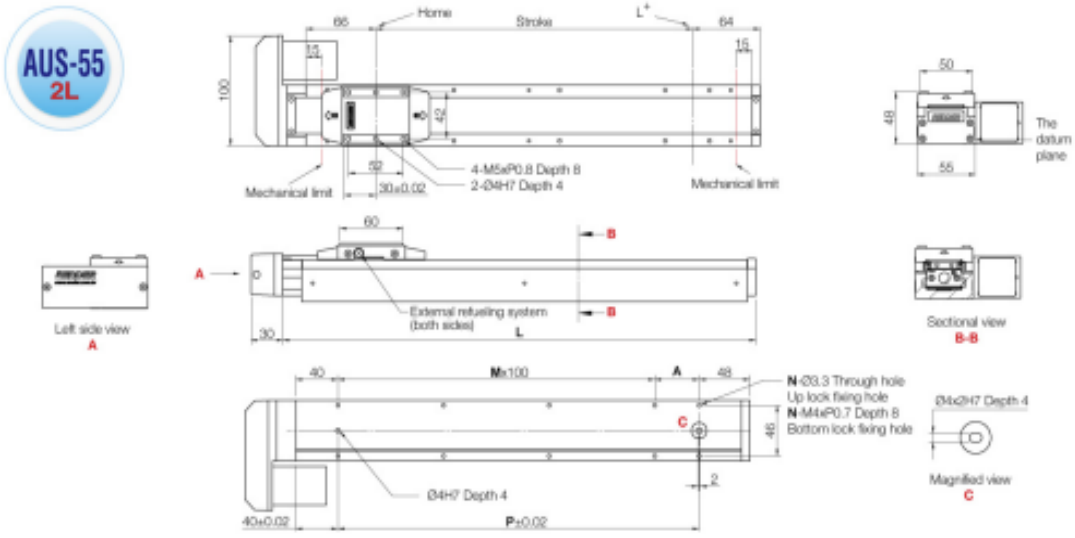

Stroke	50	100	150	200	250	300	350	400	450	500	550	600
L	198	248	298	348	398	448	498	548	598	648	698	748
A	92	42	92	42	92	42	92	42	92	42	92	42
P	92	142	192	242	292	342	392	442	492	542	592	642
M	-	1	1	2	2	3	3	4	4	5	5	6
N	4	6	6	8	8	10	10	12	12	14	14	16
Weight (kg)	1.4	1.5	1.6	1.7	1.9	2.0	2.2	2.3	2.4	2.6	2.7	2.8

AUS-55 • RIGHT • Specification Table -2R

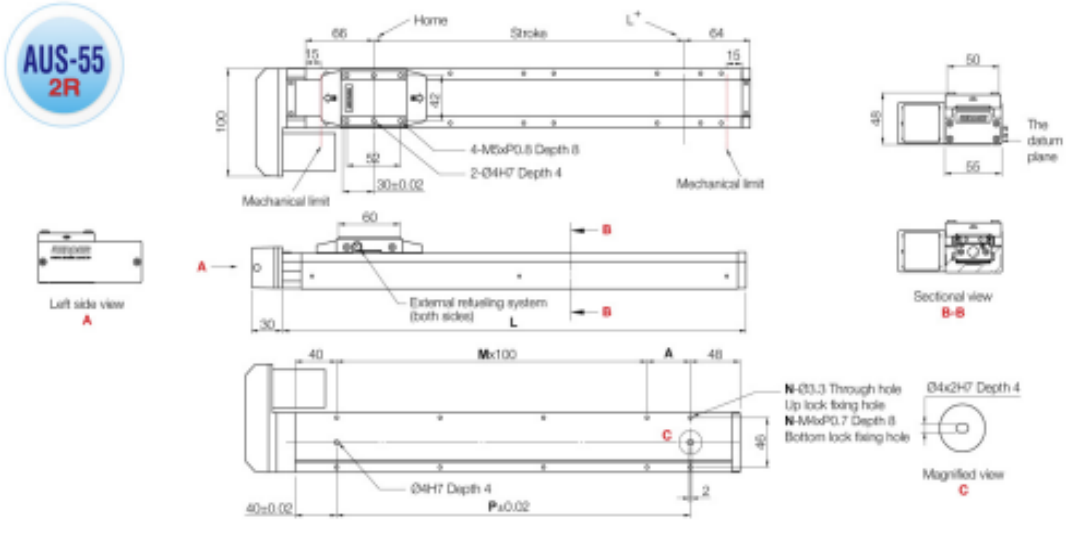

Stroke	50	100	150	200	250	300	350	400	450	500	550	600
L	198	248	298	348	398	448	498	548	598	648	698	748
A	92	42	92	42	92	42	92	42	92	42	92	42
P	92	142	192	242	292	342	392	442	492	542	592	642
M	-	1	1	2	2	3	3	4	4	5	5	6
N	4	6	6	8	8	10	10	12	12	14	14	16
Weight (kg)	1.4	1.5	1.6	1.7	1.9	2.0	2.2	2.3	2.4	2.6	2.7	2.8

AUS-65 Electric Built-in Guideway Servo Actuator

Ball screw

2D, 3D Download

Motor rated output	100W		
Pitch / lead (mm) Ø12	5	10	20
Guideway rated dynamic load Ca (N)	2036	2036	2036
Guideway rated static load Coa (N)	29401	29401	29401
Repeatability (mm)	C crade : ±0.008 / P crade : ±0.003		
Horizotal thrust (Kg)	45	30	10
Vertical thrust (Kg)	15	10	3.2
Max. speed (mm/sec)	290	580	1000
Effective stroke	50 mm ~ 800 mm		
Coupling (d1xd2)	5 mm x 8 mm		

Load and overhang length

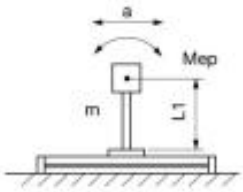

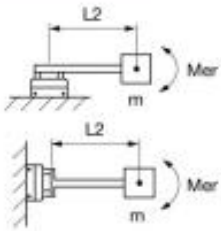

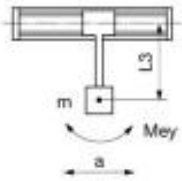

Horizotal installation
Load (Kg) and overhang length L1 (mm)

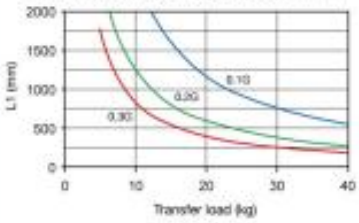

Horizotal / wall-mounted installation
Load (Kg) and overhang length L2 (mm)

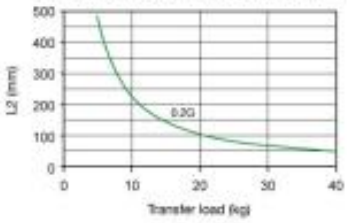

Wall-mounted installation
Load (Kg) and overhang length L3 (mm)

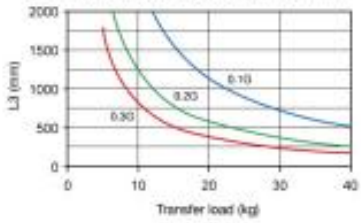

Center of gravity displacement of load moment

*Please appropriately reduce the motor speed to avoid vibration when actuator's stroke exceeds 500 mm

Dynamic load moment table (N · m)

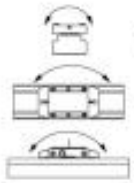

Static load moment table (N · m)

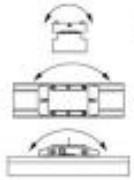

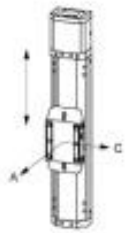

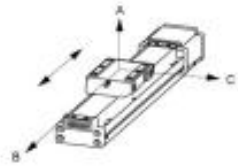

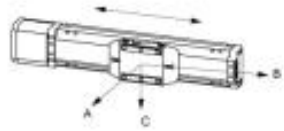

Unit : mm

Vertical installation		A	C
Pitch 5mm	7.0Kg	324	324
	12.0Kg	189	189
	15.0Kg	151	151
Pitch 10mm	0.8Kg	2610	2610
	1.6Kg	1305	1306
	3.2Kg	653	653
Pitch 20mm	0.4Kg	5023	5023
	0.8Kg	2512	2512
	1.2Kg	1674	1674

Unit : mm

Horizontal installation		A	B	C
Pitch 5mm	25Kg	621	91	98
	30Kg	503	74	79
	40Kg	355	52	56
Pitch 10mm	15Kg	655	161	155
	25Kg	372	91	88
	40Kg	213	52	51
Pitch 20mm	5Kg	1725	507	489
	10Kg	841	247	229
	13Kg	637	187	173

Unit : mm

Wall-mounted installation		A	B	C
Pitch 5mm	10Kg	262	245	1664
	20Kg	123	115	780
	30Kg	76	71	485
Pitch 10mm	5Kg	489	505	2090
	10Kg	237	245	999
	15Kg	153	158	645
Pitch 20mm	4Kg	587	635	2159
	8Kg	286	310	1053
	10Kg	226	245	832

* Calculation basis of dynamic rated load : The sliding block's service life is 10,000km

AUS-65 • STRAIGHT • Specification Table-1

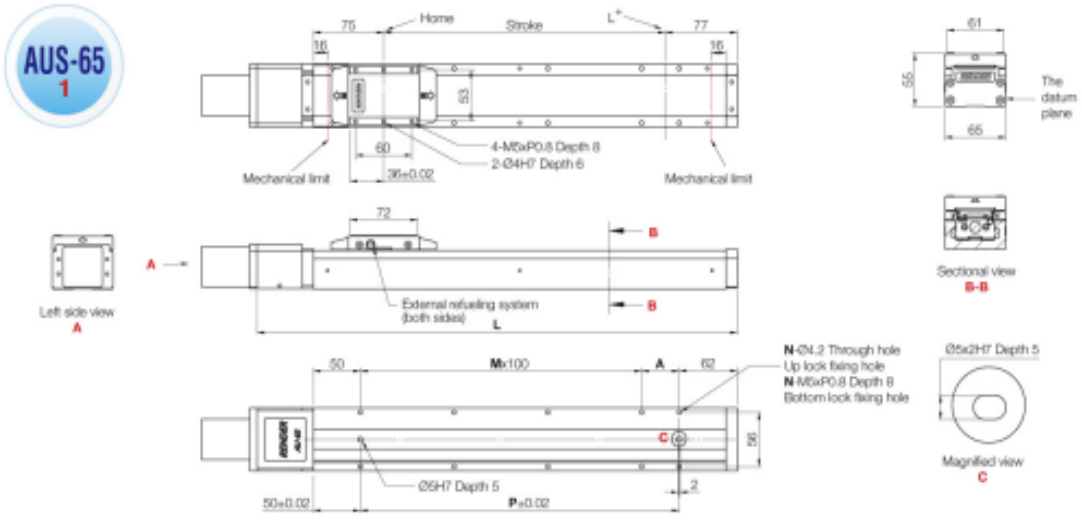

Stroke	50	100	150	200	250	300	350	400	450	500	550	600	650	700	750	800
L	262	312	362	412	462	512	562	612	662	712	762	812	862	912	962	1012
A	90	40	90	40	90	40	90	40	90	40	90	40	90	40	90	40
P	90	140	190	240	290	340	390	440	490	540	590	640	690	740	790	840
M	-	1	1	2	2	3	3	4	4	5	5	6	6	7	7	8
N	4	6	6	8	8	10	10	12	12	14	14	16	16	18	18	20
Weight (kg)	2.1	2.3	2.5	2.7	2.9	3.1	3.3	3.5	3.7	3.9	4.1	4.3	4.5	4.7	4.9	5.1

AUS-65 • BELOW • Specification Table -2B

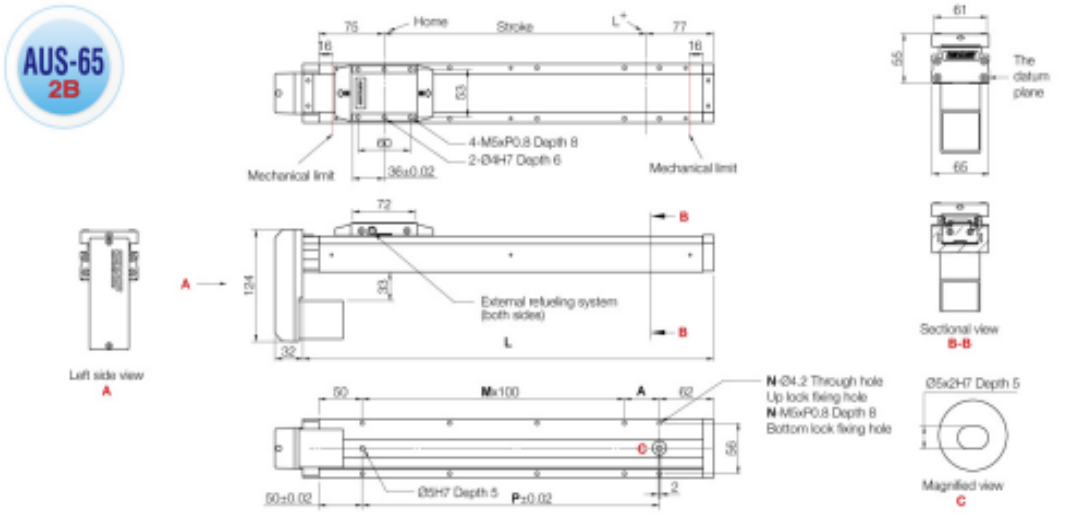

Stroke	50	100	150	200	250	300	350	400	450	500	550	600	650	700	750	800
L	220	270	320	370	420	470	520	570	620	670	720	770	820	870	920	970
A	90	40	90	40	90	40	90	40	90	40	90	40	90	40	90	40
P	90	140	190	240	290	340	390	440	490	540	590	640	690	740	790	840
M	-	1	1	2	2	3	3	4	4	5	5	6	6	7	7	8
N	4	6	6	8	8	10	10	12	12	14	14	16	16	18	18	20
Weight (kg)	2.0	2.2	2.4	2.6	2.8	3.0	3.2	3.4	3.6	3.8	4.0	4.2	4.4	4.6	4.8	5.0

AUS-65 • LEFT • Specification Table-2L

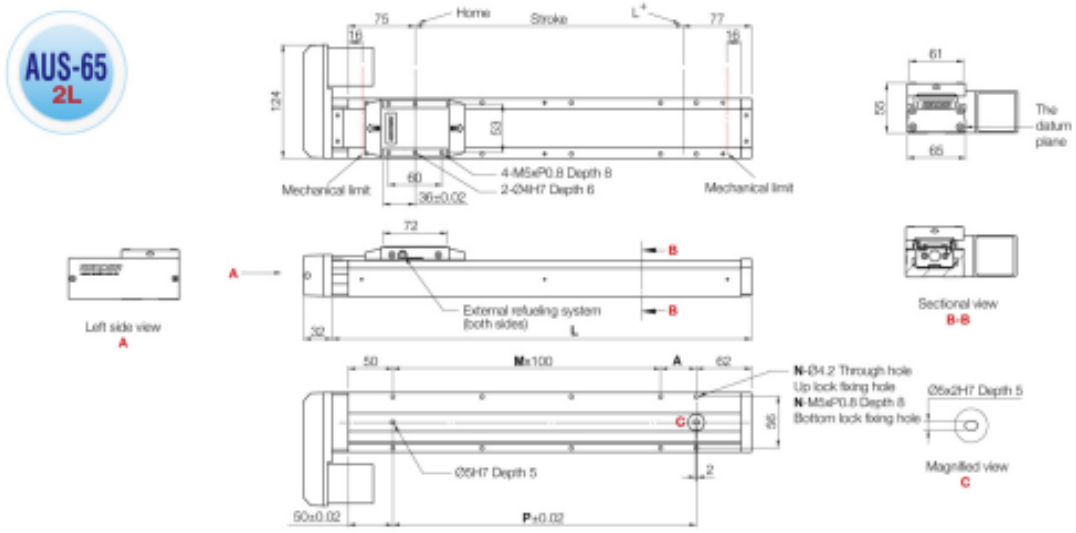

Stroke	50	100	150	200	250	300	350	400	450	500	550	600	650	700	750	800
L	220	270	320	370	420	470	520	570	620	670	720	770	820	870	920	970
A	90	40	90	40	90	40	90	40	90	40	90	40	90	40	90	40
P	90	140	190	240	290	340	390	440	490	540	590	640	690	740	790	840
M	-	1	1	2	2	3	3	4	4	5	5	6	6	7	7	8
N	4	6	6	8	8	10	10	12	12	14	14	16	16	18	18	20
Weight (kg)	2.0	2.2	2.4	2.6	2.8	3.0	3.2	3.4	3.6	3.8	4.0	4.2	4.4	4.6	4.8	5.0

AUS-65 • RIGHT • Specification Table-2R

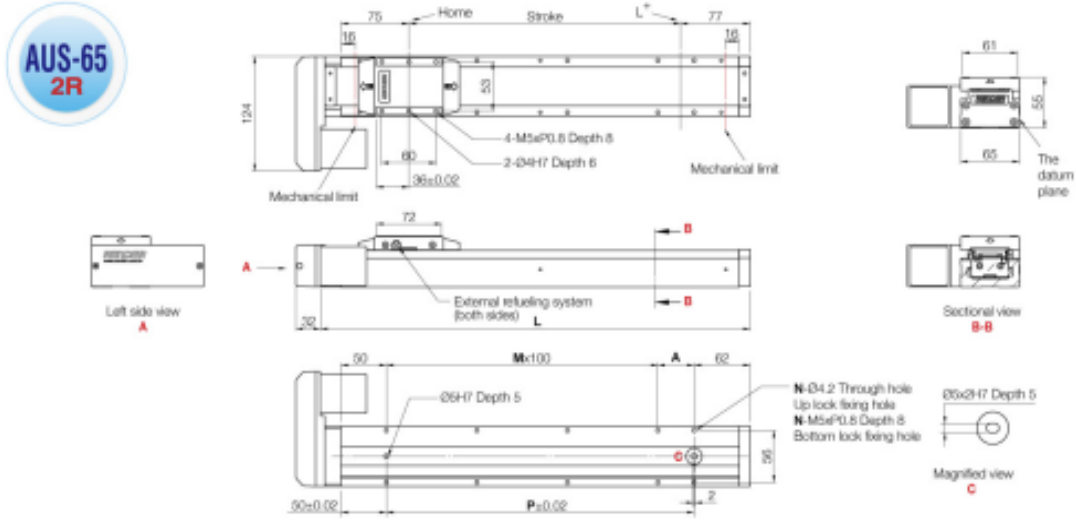

Stroke	50	100	150	200	250	300	350	400	450	500	550	600	650	700	750	800
L	220	270	320	370	420	470	520	570	620	670	720	770	820	870	920	970
A	90	40	90	40	90	40	90	40	90	40	90	40	90	40	90	40
P	90	140	190	240	290	340	390	440	490	540	590	640	690	740	790	840
M	-	1	1	2	2	3	3	4	4	5	5	6	6	7	7	8
N	4	6	6	8	8	10	10	12	12	14	14	16	16	18	18	20
Weight (kg)	2.0	2.2	2.4	2.6	2.8	3.0	3.2	3.4	3.6	3.8	4.0	4.2	4.4	4.6	4.8	5.0

AUS-88 Electric Built-in Guideway Servo Actuator

Ball screw

Download

Motor rated output	200W, 400W		
Pitch / lead (mm) Ø16	5	10	20
Guideway rated dynamic load Ca (N)	2524	2524	2524
Guideway rated static load Coa (N)	34153	34153	34153
Repeatability (mm)	C crade : ±0.008 / P crade : ±0.003		
Horizotal thrust (Kg)	56	43	24
Vertical thrust (Kg)	22	13	5.6
Max. speed (mm/sec)	290	580	1000
Effective stroke	50mm ~ 1100mm		
Coupling (d1xd2)	6 mm x 14 mm		

UT-SERVO □56

Load and overhang length

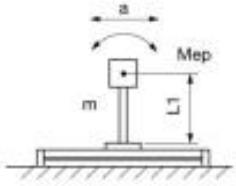

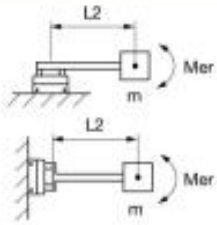

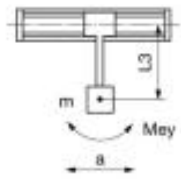

Horizotal installation
Load (Kg) and overhang length L1 (mm)

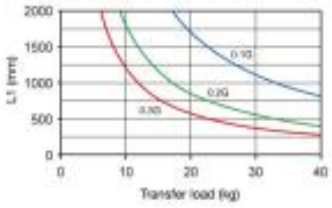

Horizotal / wall-mounted installation
Load (Kg) and overhang length L2 (mm)

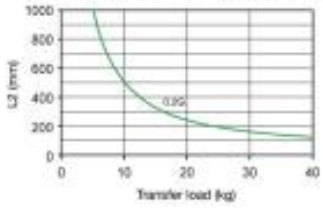

Wall-mounted installation
Load (Kg) and overhang length L3 (mm)

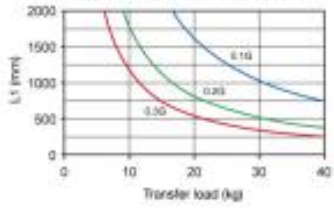

Center of gravity displacement of load moment

*Please appropriately reduce the motor speed to avoid vibration when actuator's stroke exceeds 800 mm

Dynamic load moment table (N · m)

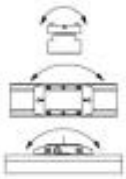

Static load moment table (N · m)

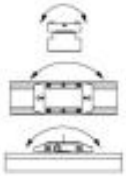

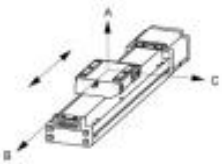

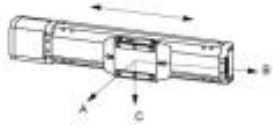

Unit : mm

Vertical installation		A	C
Pitch 5mm	12Kg	269	269
	18Kg	179	179
	24Kg	134	134
Pitch 10mm	5Kg	594	594
	7Kg	425	425
	9Kg	330	330
Pitch 20mm	2.5Kg	1144	1144
	4.0Kg	715	715
	5.5Kg	520	520

Unit : mm

Horizontal installation		A	B	C
Pitch 5mm	30Kg	739	109	165
	40Kg	530	78	119
	56Kg	350	51	79
Pitch 10mm	23Kg	696	170	227
	32Kg	444	109	145
	43Kg	291	71	95
Pitch 20mm	13Kg	918	270	337
	20Kg	579	170	213
	24Kg	475	140	174

Unit : mm

Wall-mounted installation		A	B	C
Pitch 5mm	25Kg	204	133	907
	35Kg	139	91	619
	48Kg	96	62	425
Pitch 10mm	20Kg	227	170	696
	25Kg	177	133	544
	30Kg	145	109	444
Pitch 20mm	12Kg	367	294	969
	18Kg	238	191	649
	20Kg	213	170	579

* Calculation basis of dynamic rated load : The sliding block's service life is 10,000km

AUS-88 • STRAIGHT • Specification Table-1

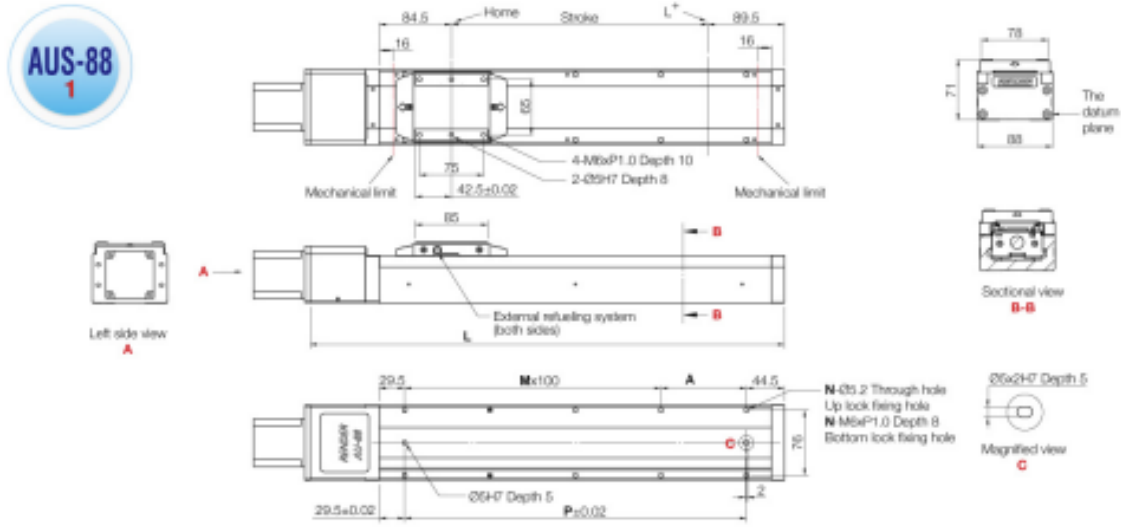

Stroke	50	100	150	200	250	300	350	400	450	500	550	600	650	700	750	800	850	900	950	1000	1050	1100
L	305	355	405	455	505	555	605	655	705	755	805	855	905	955	1005	1055	1105	1155	1205	1255	1305	1355
A	50	100	50	100	50	100	50	100	50	100	50	100	50	100	50	100	50	100	50	100	50	100
P	150	200	250	300	350	400	450	500	550	600	650	700	750	800	850	900	950	1000	1050	1100	1150	1200
M	1	1	2	2	3	3	5	5	6	6	7	7	8	8	9	9	10	10	11	11	12	12
N	6	6	8	8	10	10	12	12	14	14	16	16	18	18	20	20	22	22	24	24	26	26
Weight (kg)	4.1	4.5	4.8	5.1	5.4	5.8	6.1	6.4	6.7	7.1	7.4	7.8	8.1	8.4	8.7	9.0	9.4	9.7	10	10.4	10.7	11

AUS-88 • BELOW • Specification Table -2B

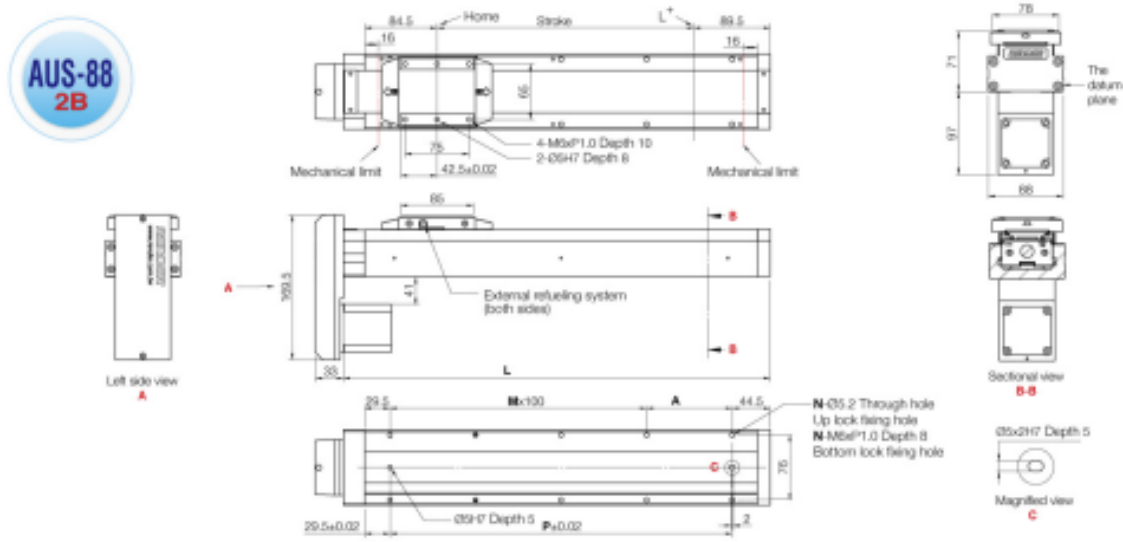

Stroke	50	100	150	200	250	300	350	400	450	500	550	600	650	700	750	800	850	900	950	1000	1050	1100
L	249	299	349	399	449	499	549	599	649	699	749	799	849	899	949	999	1049	1099	1149	1199	1249	1299
A	50	100	50	100	50	100	50	100	50	100	50	100	50	100	50	100	50	100	50	100	50	100
P	150	200	250	300	350	400	450	500	550	600	650	700	750	800	850	900	950	1000	1050	1100	1150	1200
M	1	1	2	2	3	3	5	5	6	6	7	7	8	8	9	9	10	10	11	11	12	12
N	6	6	8	8	10	10	12	12	14	14	16	16	18	18	20	20	22	22	24	24	26	26
Weight (kg)	3.8	4.1	4.5	4.8	5.1	5.4	5.8	6.1	6.4	6.7	7.1	7.4	7.8	8.1	8.4	8.7	9.0	9.4	9.7	10	10.4	10.7

AUS-88 • LEFT • Specification Table-2L

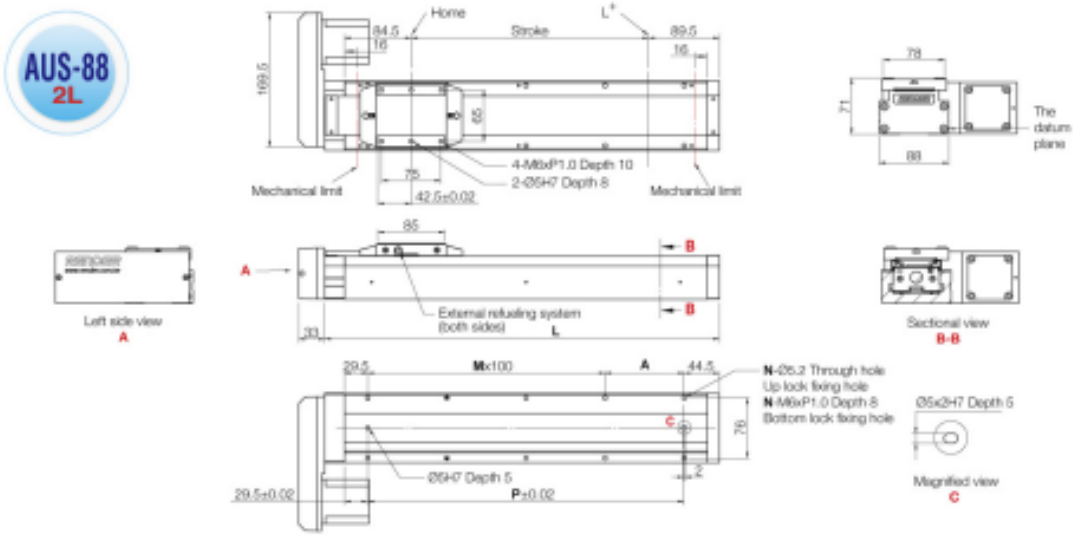

Stroke	50	100	150	200	250	300	350	400	450	500	550	600	650	700	750	800	850	900	950	1000	1050	1100
L	249	299	349	399	449	499	549	599	649	699	749	799	849	899	949	999	1049	1099	1149	1199	1249	1299
A	50	100	50	100	50	100	50	100	50	100	50	100	50	100	50	100	50	100	50	100	50	100
P	150	200	250	300	350	400	450	500	550	600	650	700	750	800	850	900	950	1000	1050	1100	1150	1200
M	1	1	2	2	3	3	5	5	6	6	7	7	8	8	9	9	10	10	11	11	12	12
N	6	6	8	8	10	10	12	12	14	14	16	16	18	18	20	20	22	22	24	24	26	26
Weight (kg)	3.8	4.1	4.5	4.8	5.1	5.4	5.8	6.1	6.4	6.7	7.1	7.4	7.8	8.1	8.4	8.7	9.0	9.4	9.7	10	10.4	10.7

AUS-88 • RIGHT • Specification Table-2R

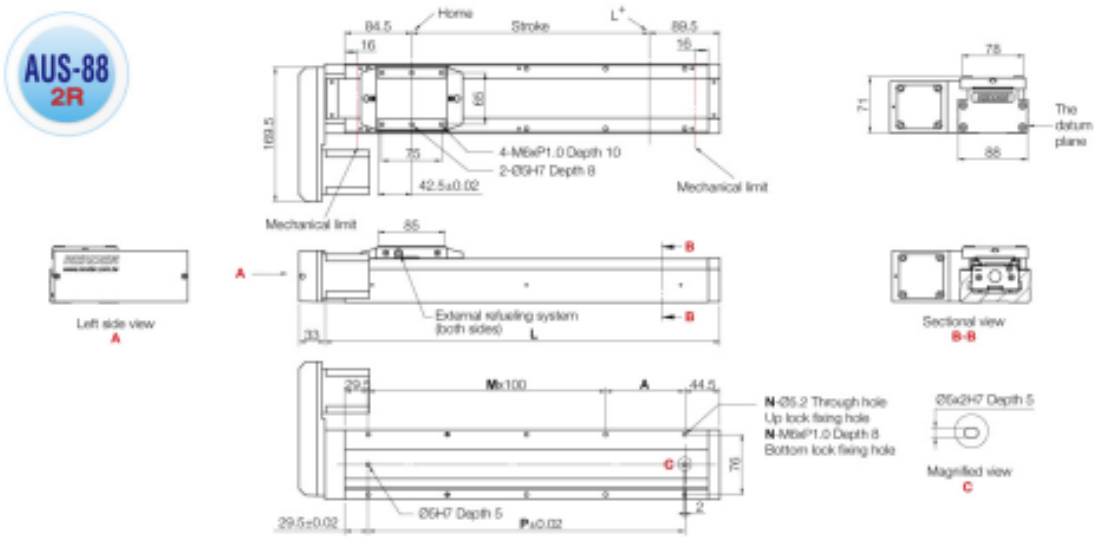

Stroke	50	100	150	200	250	300	350	400	450	500	550	600	650	700	750	800	850	900	950	1000	1050	1100
L	249	299	349	399	449	499	549	599	649	699	749	799	849	899	949	999	1049	1099	1149	1199	1249	1299
A	50	100	50	100	50	100	50	100	50	100	50	100	50	100	50	100	50	100	50	100	50	100
P	150	200	250	300	350	400	450	500	550	600	650	700	750	800	850	900	950	1000	1050	1100	1150	1200
M	1	1	2	2	3	3	5	5	6	6	7	7	8	8	9	9	10	10	11	11	12	12
N	6	6	8	8	10	10	12	12	14	14	16	16	18	18	20	20	22	22	24	24	26	26
Weight (kg)	3.8	4.1	4.5	4.8	5.1	5.4	5.8	6.1	6.4	6.7	7.1	7.4	7.8	8.1	8.4	8.7	9.0	9.4	9.7	10	10.4	10.7

AU/AUS Series Speed limit

OVER SPEED	Model No.	AU/AUS-45		AU/AUS-55			AU/AUS-65			AU/AUS-88		
	Pitch	1	2.5	2	5	10	5	10	20	5	10	20
	Motor rated output	30W (□ 28)		50W (□35)			100W (□42)			200W/400W (□56)		
Effective Stroke (mm) \ Motor max.Speed (mm/sec)		60	150	120	290	580	290	580	1000	290	580	1000
Speed limit for C7-Grade ball screw	50	-	-	-	-	-	-	-	-	-	-	-
	100	-	-	-	-	-	-	-	-	-	-	-
	150	-	-	-	-	-	-	-	-	-	-	-
	200	-	-	-	-	-	-	-	-	-	-	-
	250	-	-	-	-	-	-	-	-	-	-	-
	300	-	-	-	-	-	-	-	-	-	-	-
	350	46	122	96	243	480	-	-	-	-	-	-
	400	41	105	90	230	450	-	-	-	-	-	-
	450	30	90	83	210	420	-	-	-	-	-	-
	500	26	75	76	195	385	-	-	-	-	-	-
	550			70	175	350	243	480	960	-	-	-
	600			60	150	300	230	420	900	-	-	-
	650						210	420	830	-	-	-
	700						195	385	770	-	-	-
	750						175	350	680	-	-	-
	800						150	300	600	-	-	-
	850									225	450	900
	900									200	400	800
	950									166	330	670
	1000									130	270	540
	1050									100	200	400
	1100									70	142	285

※When actuators running at a high speed, please refer to this speed limit table to prevent the vibration of the actuators and the reduction of the motor torque. The speed limit table is limited to UT-servo motor, AC servo are not limited to this table.
※Please refer to page 83 to UT-servo motor torque characteristics.

Acceleration of AUS series actuators

Pitch	≦2.5mm	5mm	10mm	20mm
Setting range	0.1G	0.15G	0.25G	0.3G

AUT-65 Belt Actuator

1. Effective Stroke : 200 mm ~ 1200 mm
2. Max. Speed : 2250 mm/sec
3. Repeatability : ±0.04 mm/M
4. Max. load : 40 kg (can be equipped with the reducer)

AUT-88 Belt Actuator

1. Effective Stroke : 500 mm ~ 1500 mm
2. Max. Speed : 2800mm/sec
3. Repeatability : ±0.04 mm/M
4. Max. load : 56 kg (can be equipped with the reducer)

Product structure

1. Top cover
2. Carrier
3. Gear seat
4. Sensor : Home, Ls+, Ls-
5. Belt
6. Belt's tension adjusting seat
7. Belt's adjusting screw
8. Sensor fixing rail
9. Coupling
10. Motor flange
11. Body
12. Built-in guideway
13. Motor mount
14. Refueling hole

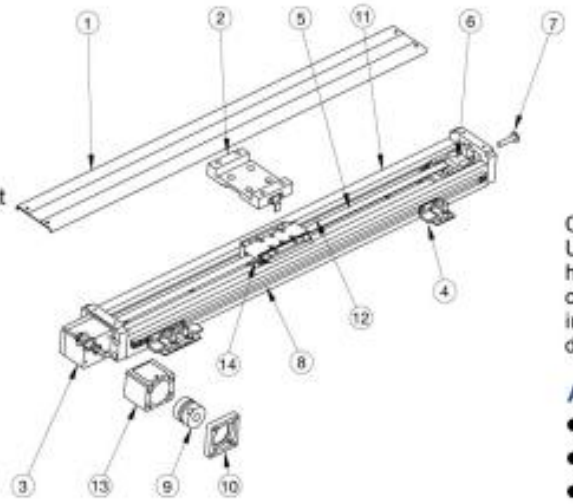

Continue the use of U-shaped body with hardened guideways on both sides and introduce a belt-driven design.

AUT series

- Longer travel
- Higher speed
- Reduced size by 45%

Introduction

AUT | 65 | - | P45 | - | S200 | - | 2RS3L | - | MUT6503 | - | K1 | G3

AUT	Product code	Electric built-in guideway servo actuator • belt driven
65	Body width	**65** : 65mm **88** : 88mm
P45	Pitch (lead)	**65** : 45mm **88** : 56mm
-S200	Effective stroke	**AUT65** Stroke : 200~1200mm (Interval 100mm) **AUT88** Stroke : 500~1500mm (Interval 100mm)
-2R	Motor orientation	**2L** : Left **2R** : Right
S3L	Sensor location	**S0** : No Sensor **S1** : Only home point **S2** : Only L⁻, L⁺points **S3** : With 3 Sensors **L** : Externally on the left **R** : Externally on the right
-MUT	Flange fixing board	**M0** : No motor and motor flange **MS** : Servo motor **MUT** : UT-Servo motor **MT** : Stepping motor
-K1	Coupling	**K0** : No coupling **K1** : With coupling
G3	Reducer ratio	**G3=3:1** / G4 / G5 / G6 / G7 / G8 / G9 / G10

AUT-65 Belt Actuator

General Environment • Belt driven

Repeatability	±0.04 mm/M
Pitch	45 mm
Max. load	40 kg (can be equipped with the reducer)
Max. speed	2250 mm/sec
Reducer ratio	3、4、5、6、7、8、9、10、15、20、25、30

Fixing method	Coupling	
Up / bottom lock M5-Ø5.5 Through hole	AC 50W	d1xd2=6x8
	AC100W	d1xd2=6x8
	MUT35	d1xd2=6x5
	MUT42	d1xd2=6x5

Applicable motor

AC Servo Motor：50W, 100W

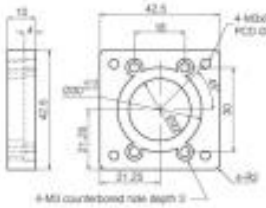

Panasonic AC100W

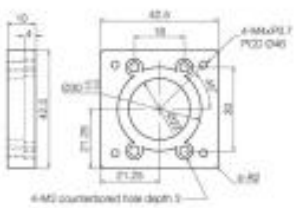

Mitsubishi AC100W

DC Stepping Motor：□42

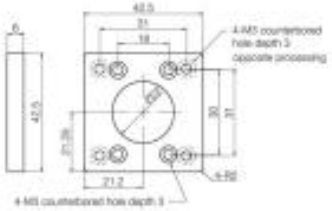

UT-Servo □42

Sensor type list

Brand and spec.		Outgoing	Remark
Omron	EES x 671 x 3	30 cm	Standard configuration system is NPN
	EES x 674 x 3		
Panasonic	GX-F12		
Sunx	GL-8HU		
Taiwan Liansheng	DU-911		

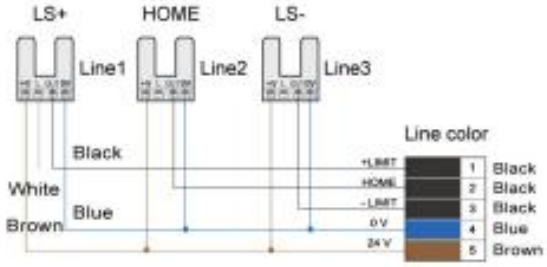

Belt tension adjustment procedure

1.Remove the 4 screws from the top cover, and remove the top cover
2.Loose the 2 setscrews of the gear mechanism
3.Tighten the adjusting screw properly
4.Restore in reverse order

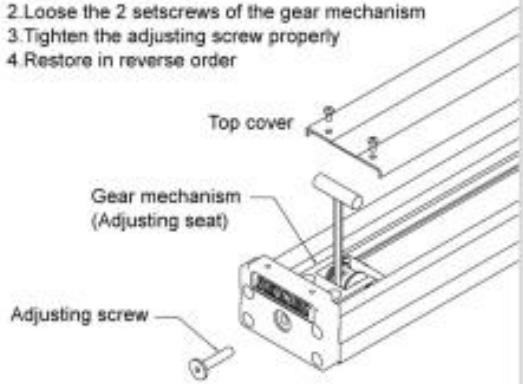

When adjusting the belt tension, please place the belt in the middle of the gear. If the belt is misaligned, it will rub against the edge of the gear and cause breakage.

AUT-65

Belt

2D, 3D Download

Applicable motor
AC Servo motor : 50W, 100W

UT-SERVO □42

AUT-65 • LEFT • Specification Table -2L

AUT-65 2L

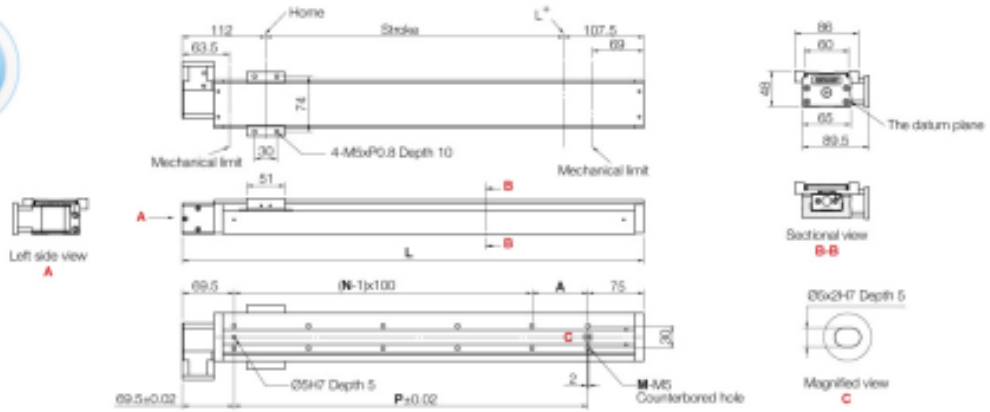

Stroke	200	300	400	500	600	700	800	900	1000	1100	1200
L	419.5	519.5	619.5	719.5	819.5	919.5	1019.5	1119.5	1219.5	1319.5	1419.5
A	75	75	75	75	75	75	75	75	75	75	75
M	8	10	12	14	16	18	20	22	24	26	28
N	2	3	4	5	6	7	8	9	10	11	12
P	275	375	475	575	675	775	875	975	1075	1175	1275
Weight (kg)	2.5	2.9	3.2	3.6	3.9	4.3	4.6	5	5.3	5.7	6

AUT-65 • RIGHT • Specification Table -2R

AUT-65 2R

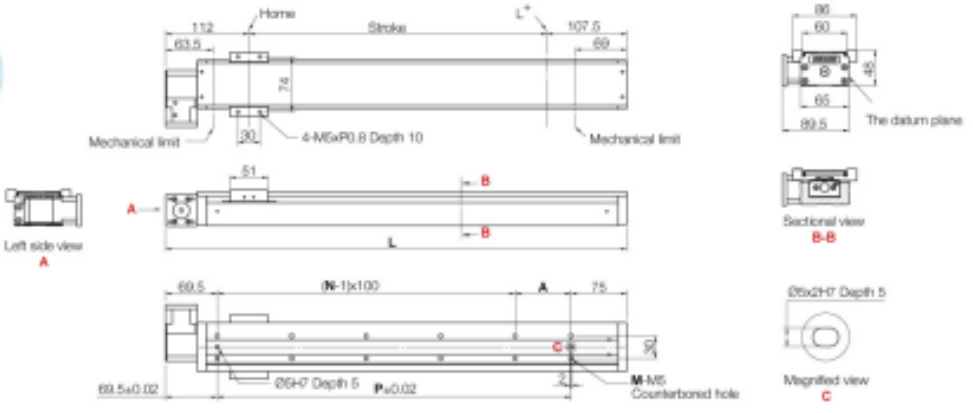

Stroke	200	300	400	500	600	700	800	900	1000	1100	1200
L	419.5	519.5	619.5	719.5	819.5	919.5	1019.5	1119.5	1219.5	1319.5	1419.5
A	75	75	75	75	75	75	75	75	75	75	75
M	8	10	12	14	16	18	20	22	24	26	28
N	2	3	4	5	6	7	8	9	10	11	12
P	275	375	475	575	675	775	875	975	1075	1175	1275
Weight (kg)	2.5	2.9	3.2	3.6	3.9	4.3	4.6	5	5.3	5.7	6

AUT-88 Belt Actuator

Repeatability	±0.04 mm/M
Pitch	56 mm
Max. load	56 kg (can be equipped with the reducer)
Max. speed	2800 mm/sec
Reducer ratio	3、4、5、6、7、8、9、10、15、20、25、30

Fixing method	Coupling	
Up / bottom lock M6-Ø6.5 Through hole	AC 100W	d1xd2=6x8
	AC 200W	d1xd2=6x14
	AC 400W	d1xd2=6x14
	MUT56	d1xd2=6x8

Applicable motor

- AC Servo Motor：AC100W, AC200W, AC400W
- DC Stepping Motor：□56

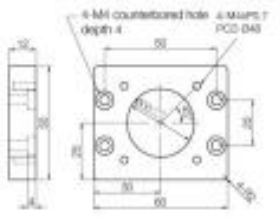
Mitsubishi AC100W

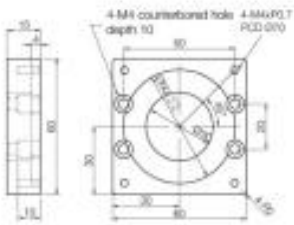
Mitsubishi AC200W+AC400W

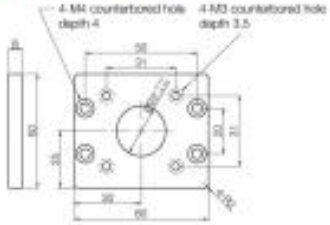
UT-Servo□56

Sensor type list

Brand and spec.		Outgoing	Remark
Omron	EES x 671 x 3	30 cm	Standard configuration system is NPN
	EES x 674 x 3		
Panasonic	GX-F12		
Sunx	GL-8HU		
Taiwan Liansheng	DU-911		

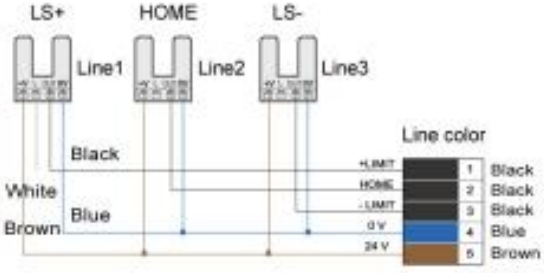

Belt tension adjustment procedure

1. Remove the 4 screws from the top cover, and remove the top cover
2. Loose the 2 setscrews of the gear mechanism
3. Tighten the adjusting screw properly
4. Restore in reverse order

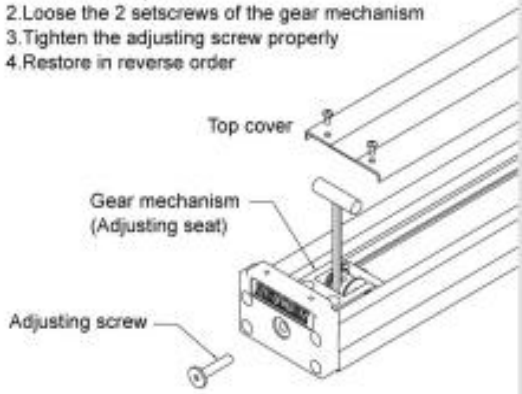

When adjusting the belt tension, please place the belt in the middle of the gear. If the belt is misaligned, it will rub against the edge of the gear and cause breakage.

AUT-88

Belt

Download

Applicable motor
AC Servo motor：100W, 200W, 400W

UT-SERVO □56

AUT-88 • LEFT • Specification Table -2L

AUT-88 2L

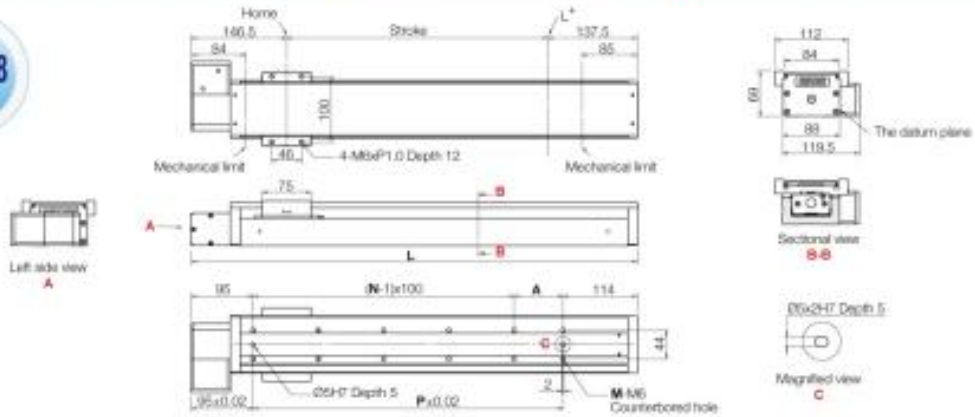

Stroke	500	600	700	800	900	1000	1100	1200	1300	1400	1500
L	784	884	984	1084	1184	1284	1384	1484	1584	1684	1784
A	75	75	75	75	75	75	75	75	75	75	75
M	14	16	18	20	22	24	26	28	30	32	34
N	5	6	7	8	9	10	11	12	13	14	15
P	575	675	775	875	975	1075	1175	1275	1375	1475	1575
Weight (kg)	9.8	10.1	11.8	12.8	13.8	14.8	16	16.8	17.8	18.7	19.7

AUT-88 • RIGHT • Specification Table -2R

AUT-88 2R

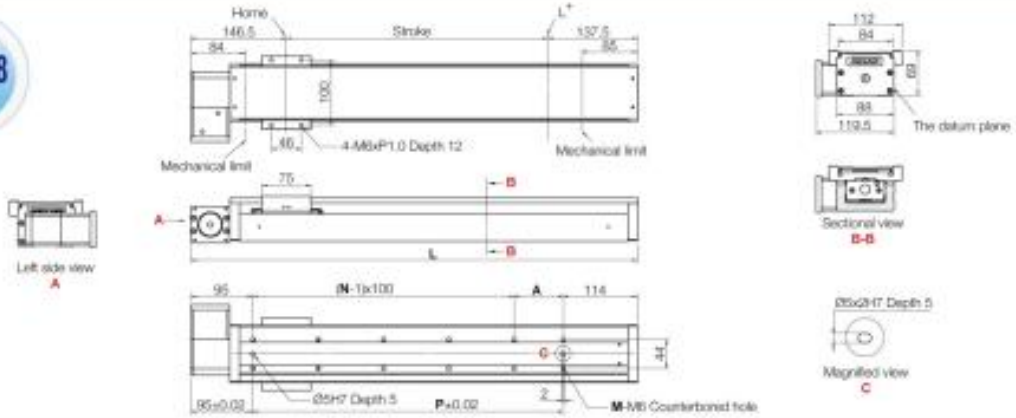

Stroke	500	600	700	800	900	1000	1100	1200	1300	1400	1500
L	784	884	984	1084	1184	1284	1384	1484	1584	1684	1784
A	75	75	75	75	75	75	75	75	75	75	75
M	14	16	18	20	22	24	26	28	30	32	34
N	5	6	7	8	9	10	11	12	13	14	15
P	575	675	775	875	975	1075	1175	1275	1375	1475	1575
Weight (kg)	9.8	10.1	11.8	12.8	13.8	14.8	16	16.8	17.8	18.7	19.7

AUTS-65 Belt Actuator

1. Effective Stroke：200 mm ~ 1500 mm
2. Max. Speed：2250 mm/sec
3. Repeatability：±0.04 mm/M
4. Max. load： 40 kg (can be equipped with the reducer)

AUTS-88 Belt Actuator

1. Effective Stroke：500 mm ~ 1800 mm
2. Max. Speed：2800 mm/sec
3. Repeatability：±0.04 mm/M
4. Max. load： 56 kg (can be equipped with the reducer)

Product structure

① Stainless steel dust-proof belt
② Upper cover
③ Carrier
④ Gear seat
⑤ Motor mount
⑥ Coupling
⑦ Motor flange
⑧ Body
⑨ Built-in guideway
⑩ Belt
⑪ Sliding seat
⑫ Belt's tension adjusting seat
⑬ Sensor fixing rail
⑭ Sensor : Home, Ls+, Ls-
⑮ Belt's adjusting screw
⑯ Refueling hole

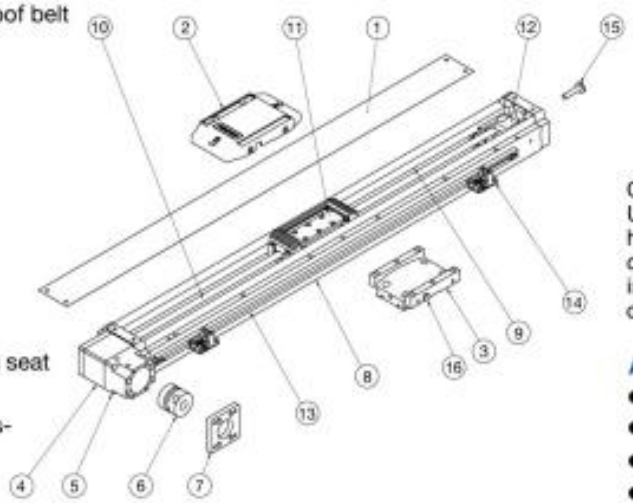

Continue the use of U-shaped body with hardened guideways on both sides and introduce a belt-driven design.

AUTS series

- Longer travel
- Higher speed
- Reduced size by 45%
- Clean room use

Introduction

AUTS	65	–	P45	–	S200	–	2RS3L	–	MUT6503	–	K1	G3

AUTS	Product code	Electric built-in guideway servo actuator • belt driven
65	Body width	**65**：65mm **88**：88mm
P45	Pitch (lead)	**65**：45mm **88**：56mm
-S200	Effective stroke	**AUT65** Stroke：200~1200mm (Interval 100mm) **AUT88** Stroke：500~1500mm (Interval 100mm)
-2R	Motor orientation	**2L**：Left **2R**：Right
S3L	Sensor location	**S0**：No Sensor **S1**：Only home point **S2**：Only L⁻, L⁺points **S3**：With 3 Sensors **L**：Externally on the left **R**：Externally on the right
-MUT	Flange fixing board	**M0**：No motor and motor flange **MS**：Servo motor **MUT**：UT-Servo motor **MT**：Stepping motor
-K1	Coupling	**K0**：No coupling **K1**：With coupling
G3	Reducer ratio	**G3=3:1** / G4 / G5 / G6 / G7 / G8 / G9 / G10

AUTS-65 Belt Actuator

Repeatability	±0.04 mm/M
Pitch	45 mm
Max. load	40 kg (can be equipped with the reducer)
Max. speed	2250 mm/sec
Reducer ratio	3、4、5、6、7、8、9、10、15、20、25、30

Fixing method	Coupling	
Lock from top to bottom M4-Ø4.2 through hole Lock from top to bottom M5 tapped hole	AC50W	d1xd2=6x8
	AC100W	d1xd2=6x8
	MUT42	d1xd2=6x5

Applicable motor

AC Servo Motor：AC50W, AC100W

DC DC Stepping Motor：□42

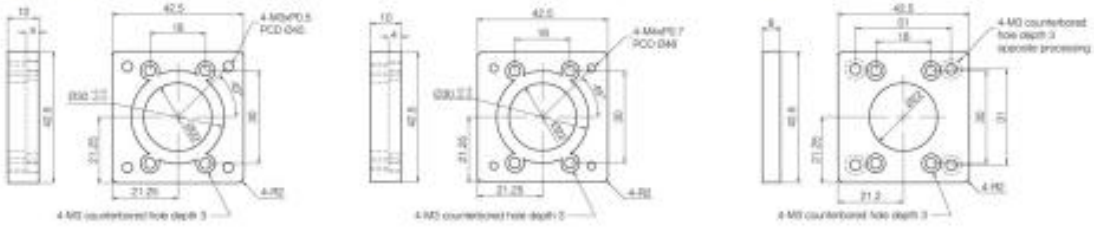

Panasonic AC100W　　Mitsubishi AC100W　　UT-Servo □42

Sensor type list

Brand and spec.		Outgoing	Remark
Omron	EES x 671 x 3	30 cm	Standard configuration system is NPN
	EES x 674 x 3		
Panasonic	GX-F12		
Sunx	GL-6HU		
Taiwan Liansheng	DU-911		

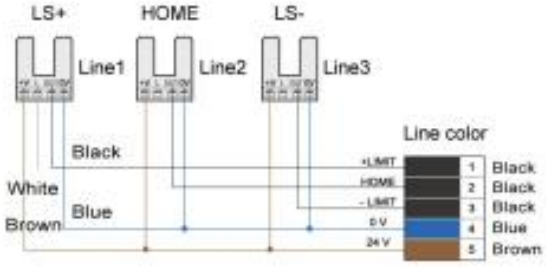

Belt tension adjustment procedure

1. Remove the 2 screws from the dust-proof belt
2. Slightly lift the tail end of the dust-proof belt
3. Loosen the 2 setscrews of the gear mechanism
4. Tighten the adjusting screw properly
5. Reset in reverse order

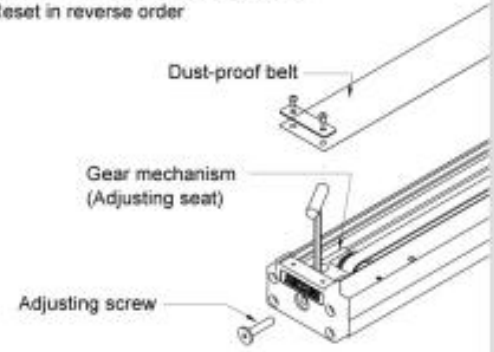

When adjusting the belt tension, please place the belt in the middle of the gear. If the belt is misaligned, it will rub against the edge of the gear and cause breakage.

AUTS-65

Belt

Download

Applicable motor
AC Servo motor：50W, 100W

UT-SERVO □42

AUTS-65 • LEFT • Specification Table -2L

AUTS-65 2L

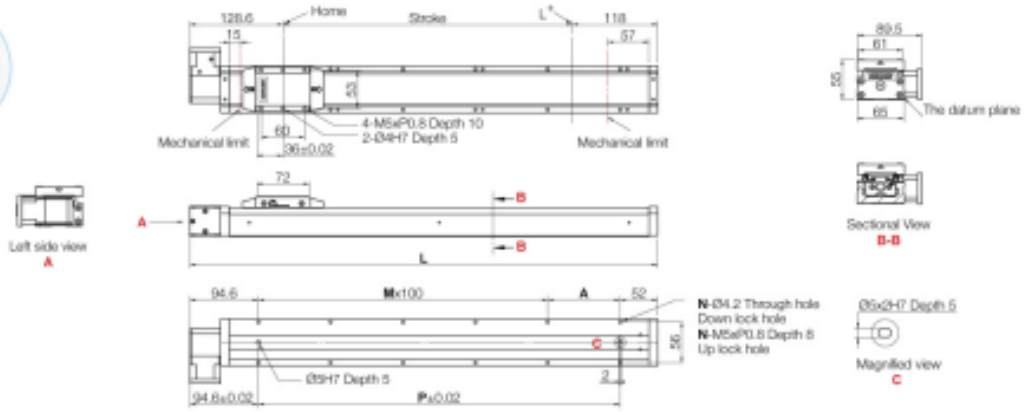

Stroke	200	300	400	500	600	700	800	900	1000	1100	1200	1300	1400	1500
L	446.6	546.6	646.6	746.6	846.6	946.6	1046.6	1146.6	1246.6	1346.6	1446.6	1546.6	1646.6	1746.6
A	100	100	100	100	100	100	100	100	100	100	100	100	100	100
M	2	3	4	5	6	7	8	9	10	11	12	13	14	15
N	8	10	12	14	16	18	20	22	24	26	28	30	32	34
P	300	400	500	600	700	800	900	1000	1100	1200	1300	1400	1500	1600
Weight (kg)	3.1	3.4	3.7	4	4.4	4.7	5	5.3	5.6	6	6.3	6.6	6.9	7.3

AUTS-65 • RIGHT • Specification Table -2R

AUTS-65 2R

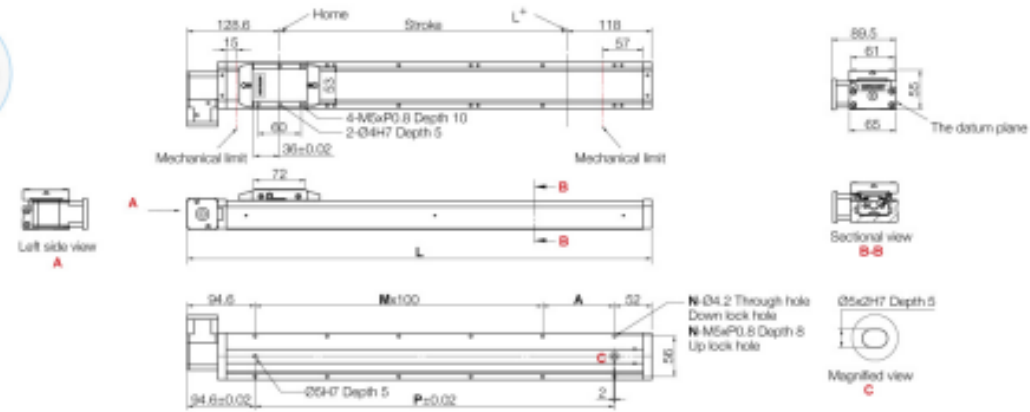

Stroke	200	300	400	500	600	700	800	900	1000	1100	1200	1300	1400	1500
L	446.6	546.6	646.6	746.6	846.6	946.6	1046.6	1146.6	1246.6	1346.6	1446.6	1546.6	1646.6	1746.6
A	100	100	100	100	100	100	100	100	100	100	100	100	100	100
M	2	3	4	5	6	7	8	9	10	11	12	13	14	15
N	8	10	12	14	16	18	20	22	24	26	28	30	32	34
P	300	400	500	600	700	800	900	1000	1100	1200	1300	1400	1500	1600
Weight (kg)	3.1	3.4	3.7	4	4.4	4.7	5	5.3	5.6	6	6.3	6.6	6.9	7.3

AUTS-88 Belt Actuator

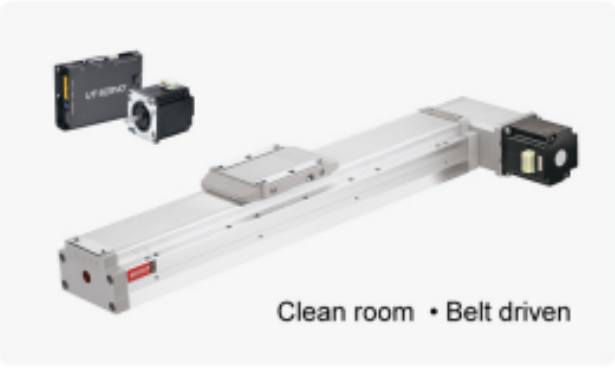

Repeatability	±0.04 mm/M
Pitch	56 mm
Max. load	56 kg (can be equipped with the reducer)
Max. speed	2800 mm/sec
Reducer ratio	3、4、5、6、7、8、9、10、15、20、25、30

Fixing method	Coupling	
Lock from top to bottom M5-Ø5.2 through hole	AC100W	d1xd2=6x8
	AC200W	d1xd2=6x14
Lock from top to bottom M6 tapped hole	AC400W	d1xd2=6x14
	MUT56	d1xd2=6x8

Applicable motor

- AC Servo Motor：AC100W, AC200W, AC400W
- DC DC Stepping Motor：□56

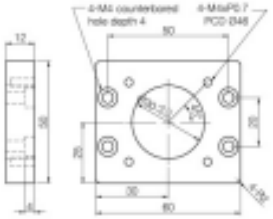

AC100W

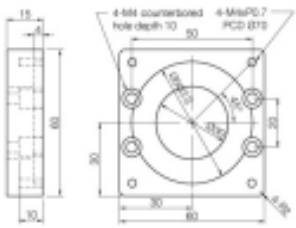

AC400W

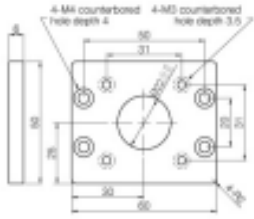

UT-Servo□56

Sensor type list

Brand and spec.		Outgoing	Remark
Omron	EES x 671 x 3	30 cm	Standard configuration system is NPN
	EES x 674 x 3		
Panasonic	GX-F12		
Sunx	GL-8HU		
Taiwan Liansheng	DU-911		

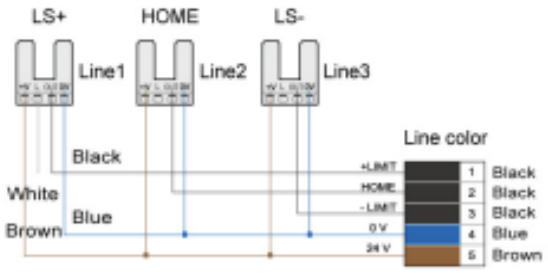

Belt tension adjustment procedure

1. Remove the 2 screws from the dust-proof belt
2. Slightly lift the tail end of the dust-proof belt
3. Loosen the 2 setscrews of the gear mechanism
4. Tighten the adjusting screw properly
5. Reset in reverse order

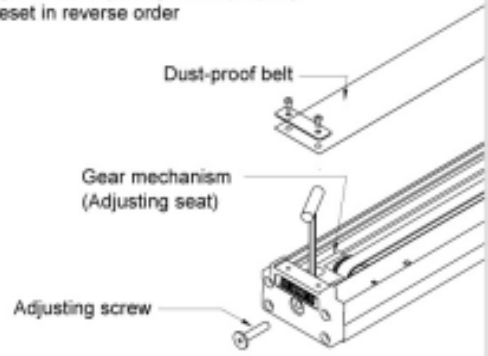

When adjusting the belt tension, please place the belt in the middle of the gear. If the belt is misaligned, it will rub against the edge of the gear and cause breakage.

AUTS-88

Belt

Download

Applicable motor
AC Servo motor：100W, 200W, 400W

UT-SERVO □56

AUTS-88 • LEFT • Specification Table -2L

AUTS-88 2L

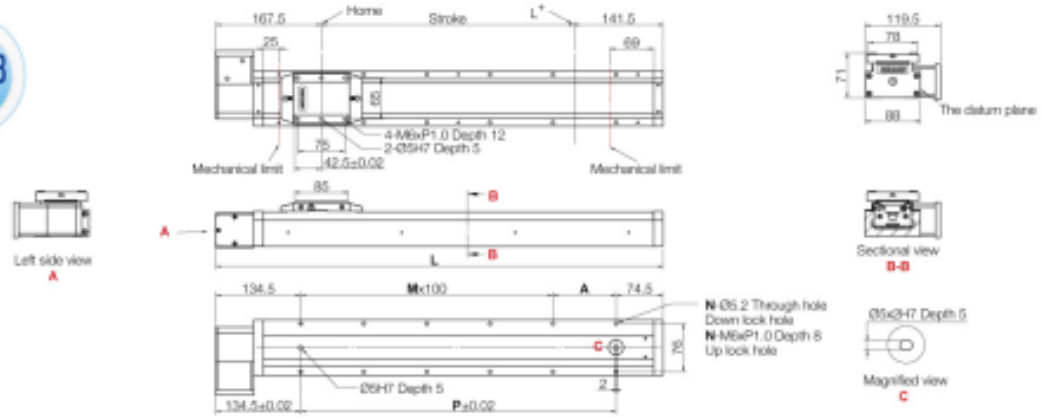

Stroke	500	600	700	800	900	1000	1100	1200	1300	1400	1500	1600	1700	1800
L	809	909	1009	1109	1209	1309	1409	1509	1609	1709	1809	1909	2009	2109
A	100	100	100	100	100	100	100	100	100	100	100	100	100	100
M	6	7	8	9	10	11	12	13	14	15	16	17	16	19
N	14	16	18	20	22	24	26	28	30	32	34	36	38	40
P	600	700	800	900	1000	1100	1200	1300	1400	1500	1600	1700	1800	1900
Weight (kg)	7.2	7.8	8.3	8.8	9.4	9.9	10.4	11	11.5	12	12.6	13	13.6	14.2

AUTS-88 • RIGHT • Specification Table -2R

AUTS-88 2R

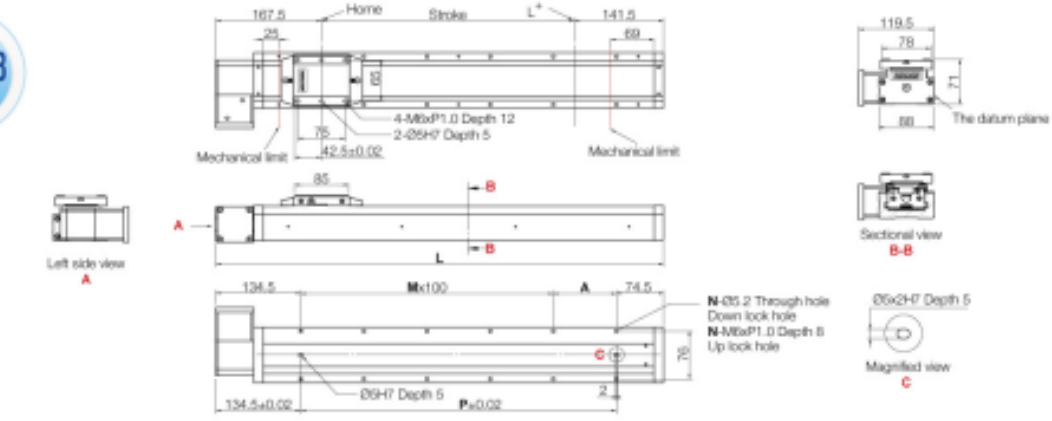

Stroke	500	600	700	800	900	1000	1100	1200	1300	1400	1500	1600	1700	1800
L	809	909	1009	1109	1209	1309	1409	1509	1609	1709	1809	1909	2009	2109
A	100	100	100	100	100	100	100	100	100	100	100	100	100	100
M	6	7	8	9	10	11	12	13	14	15	16	17	16	19
N	14	16	18	20	22	24	26	28	30	32	34	36	38	40
P	600	700	800	900	1000	1100	1200	1300	1400	1500	1600	1700	1800	1900
Weight (kg)	7.2	7.8	8.3	8.8	9.4	9.9	10.4	11	11.5	12	12.6	13	13.6	14.2

UT-SERVO™ Closed Loop Stepping System

Features:

- Standard RS-485 communication (Modbus)
- Built-in 64 sets of programmable programs
- Support sensor signal input of limit and home point
- Built-in RJ-45 interface, multiple devices can be connected in series

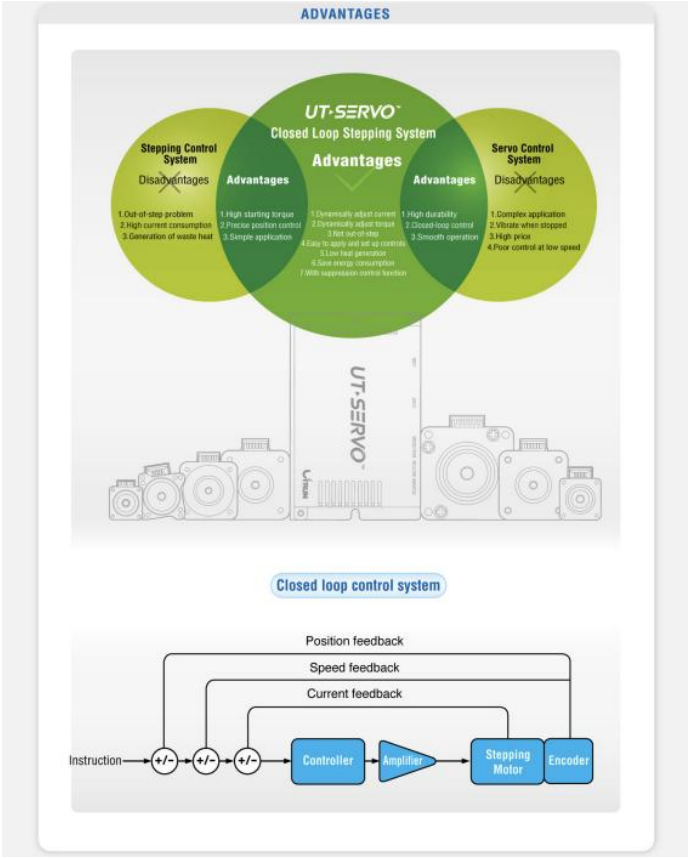

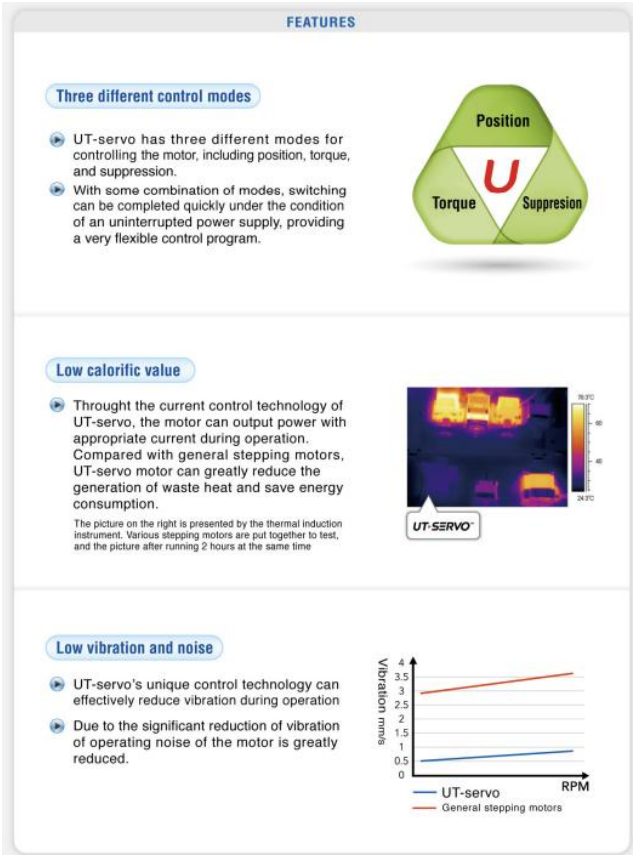

FEATURES AND CONNECTION DIAGRAM

Torque controlled elastically

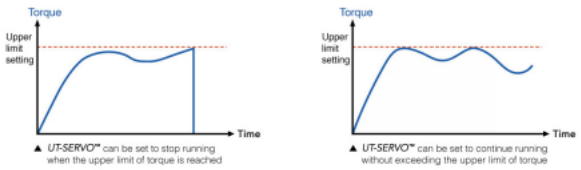

Open and closed loop control can be switched at anytime

UT-SERVO™ can be set to switch over open and closed loop control during operation, which is generally used to switch over during acceleration and deceleration. Setting time can be greatly shortened by using the open and closed loop switching function. But it can also be set to full open loop or full closed loop control.

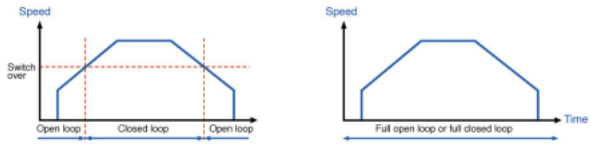

Connection diagram

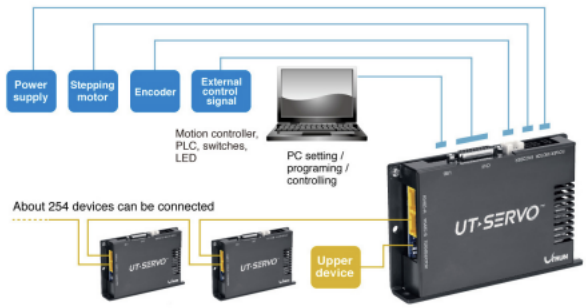

DIMENSION AND SPECIFICATION TABLE

Dimension

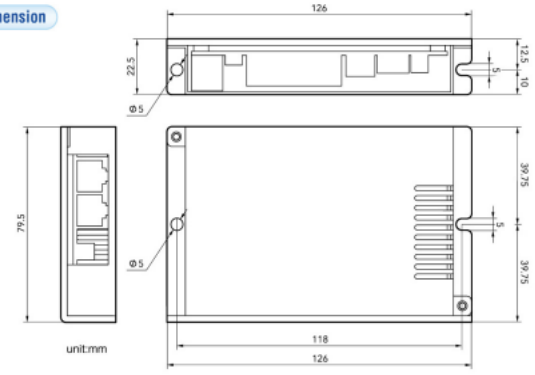

Specification table

Specification	Input voltage	DC24V -5%~+10%	DC48V±10%
	Control mode	Position, Torque, Suppression	
	Rated output current	Rated 4A	Rated 2A
	Max. output current	Max. 6A	Max. 3A
	Applicable motor	Specific motor （20mm、25mm、28mm、35mm、42mm、56mm、85mm）	
	Working temperature and humidity	0°C~50°C ,below 85%RH (No condensation)	
	Storage temperature and humidity	-20°C~85°C ,below 85%RH (No condensation)	
Input interface	Digital signal	10	
	Sensor	+LM、LM、ORG	
Output interface	Digital signal	6	
	Brake	Yes	
Control content	Pulse control	Yes	
	Parameter	Yes	
	Built-in program	64 sets of steps	
	Communication interface	USB 2.0 (Virtual COM Port)、RS-485 (RJ-45 Receptacle)	
	Communication protocol	Modbus ASCII/RTU	
Exterior	Display	Power LED / Alarm LED	
	Size	126mm(W) X 79.5mm(D) X 22.5mm(H)	
	Weight	170g	

□20mm

Unit：mm

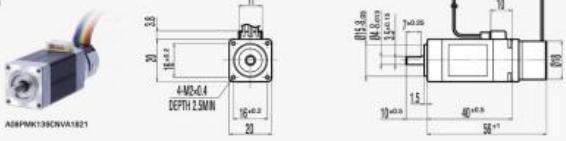

□28mm

Unit：mm

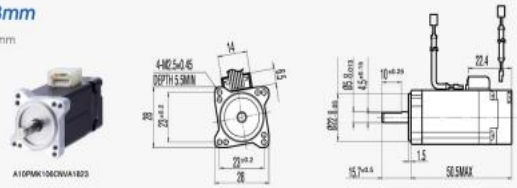

□25mm

Unit：mm

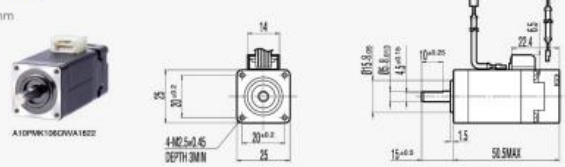

□35mm

Unit：mm

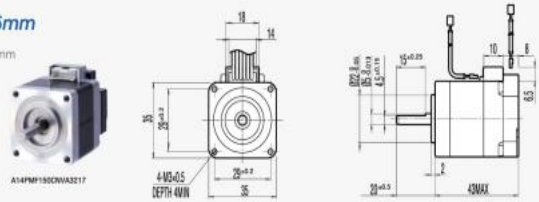

Motor Dimension

□42mm

Unit : mm

A17PMK340CNVA1824

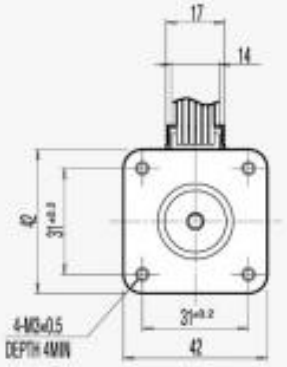

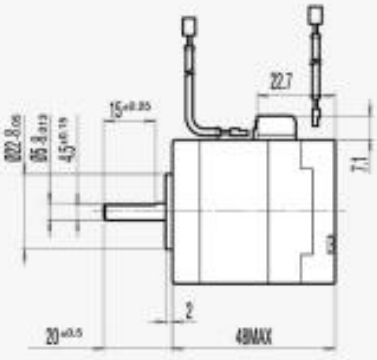

□42mm

Unit : mm

A17PMK440CNVA1825

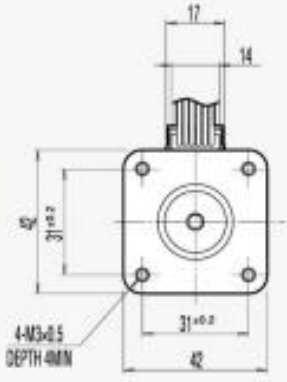

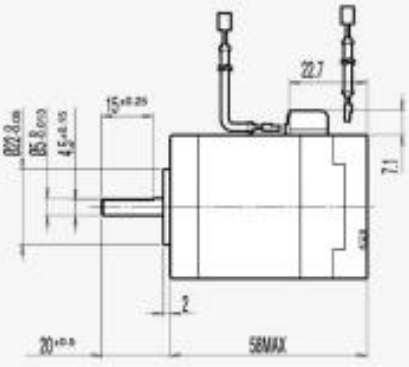

□56mm

Unit : mm

A23KMK358CNVA1826

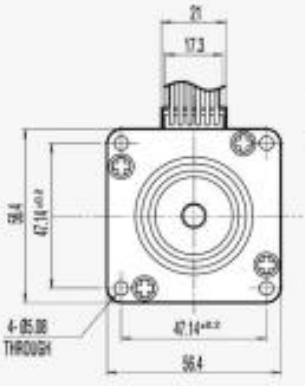

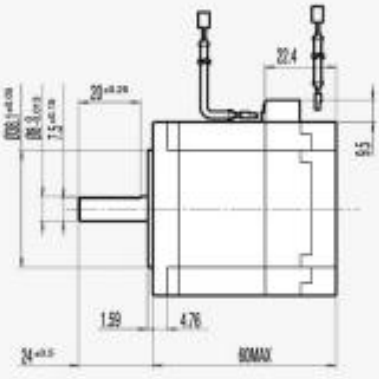

Torsion curve and speed curve

☐25mm/28mm x 50.5L

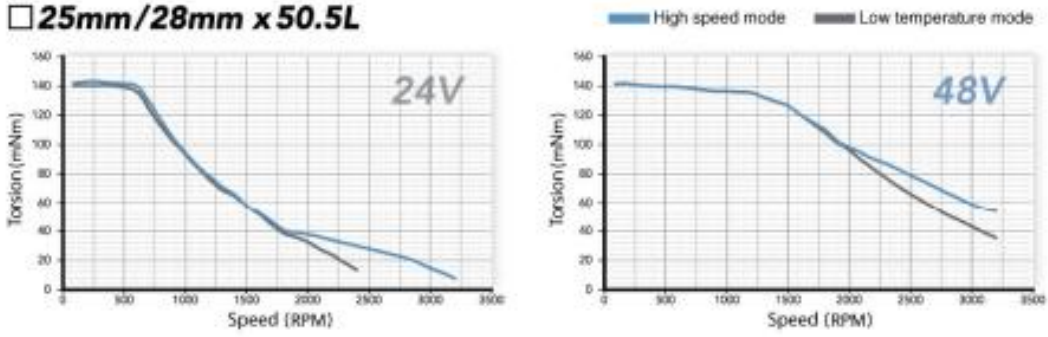

☐42mm x 48.0L

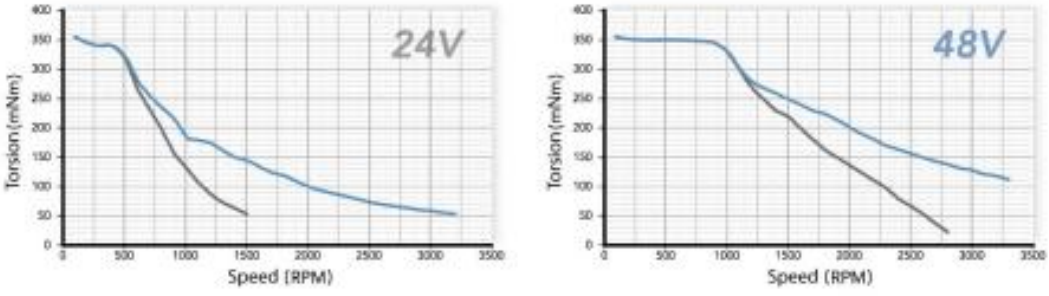

☐42mm/58.0L

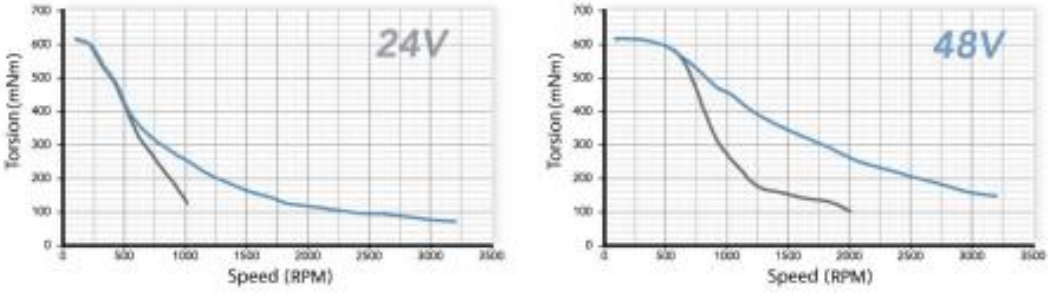

☐56mm x 60.0L

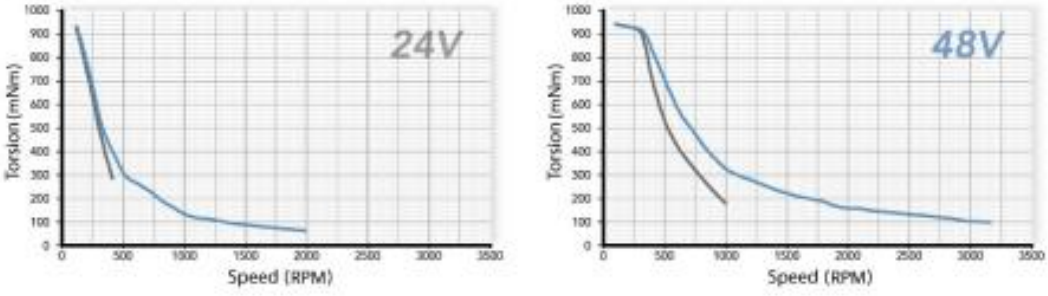

Applicable software (optional)

The basic software will come with the UT-servo motor, providing you with pre-set various operating parameters or operating procedures, which can be quickly put into your project.

Operation parameter ▶

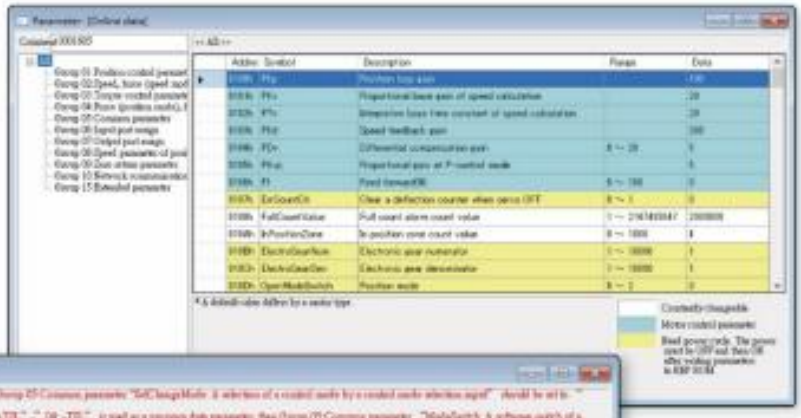

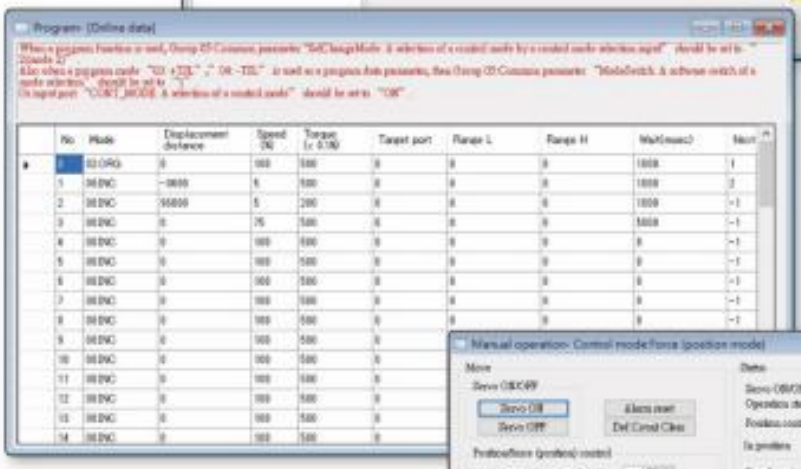

◀ Procedure

Manual operation ▶

There is also a function that provides a basic manual operation, which is convenient for testing parameters or programs.

Automatic Selection Features

Motor automatic selection function

Model setting

Apply to:

- Servo actuator
- Electric micro stage
- Electric cylinder
- Hollow rotating platform
- Multi-axis alignment stage

Operation parameter

Manual operation

Convenient for testing parameters and procedures

DZ Series

Hollow rotating platform is integrated with motor to meet diverse needs of customers.

Easily combine with any servo motor and stepping motor.
Repeated positioning performance with high load and high accuracy.

DZ-62

Dimension

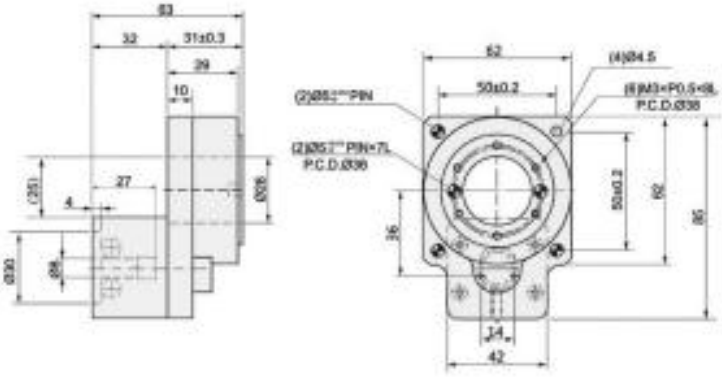

↘ Specification

Applicable motor	Permissible torque	Rotational inertia	Permissible speed	Reduction ratio	Positioning precision	Repeated positioning precision	Permissible thrust load	Permissible inertial load	Parallelism	Concentricity	Weight
W	Nm	kgm²	rpm		sec	sec	kgf	Nm	μm	mm	kg
100W	3.5	2480x10⁻⁶	200	1/10	≦15	±15	20	20	±5	±0.01	2.2

DZ-85

Dimension

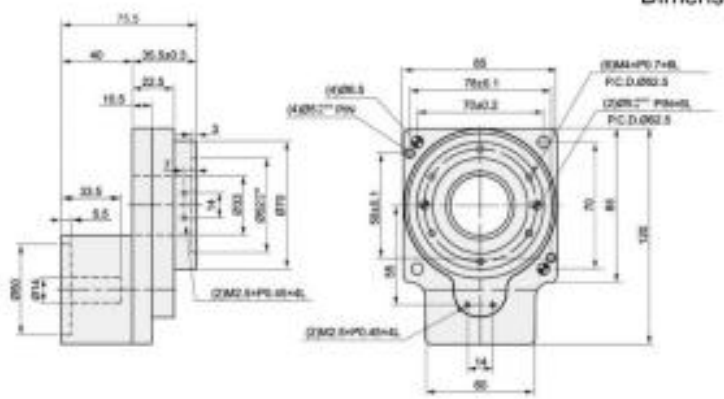

↘ Specification

Applicable motor	Permissible torque	Rotational inertia	Permissible speed	Reduction ratio	Positioning precision	Repeated positioning precision	Permissible thrust load	Permissible inertial load	Parallelism	Concentricity	Weight
W	Nm	kgm²	rpm		sec	sec	kgf	Nm	μm	mm	kg
100W 400W	20	2498x10⁻⁶	200	1/18	≦15	±15	200	80	±2	±0.01	3

DZ-130

Dimension

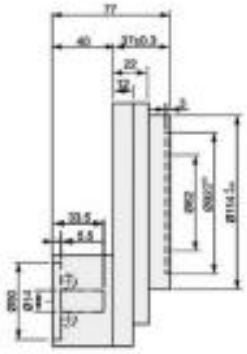

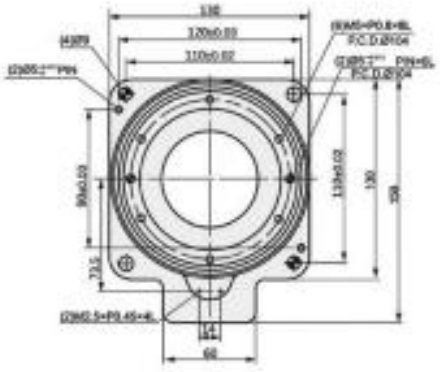

↘ Specification

Applicable motor	Permissible torque	Rotational inertia	Permissible speed	Reduction ratio	Positioning precision	Repeated positioning precision	Permissible thrust load	Permissible inertial load	Parallelism	Concentricity	Weight
W	Nm	kgm²	rpm		sec	sec	kgf	Nm	μm	mm	kg
400W	20	9472x10⁻⁶	200	1/18	≦15	±15	250	100	±2	±0.01	5.5

DZ-200

Dimension

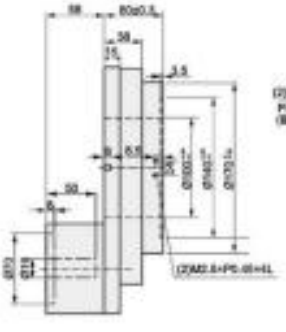

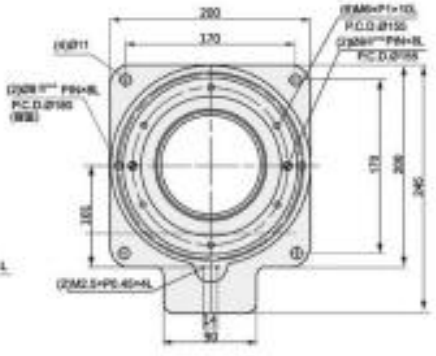

↘ Specification

Applicable motor	Permissible torque	Rotational inertia	Permissible speed	Reduction ratio	Positioning precision	Repeated positioning precision	Permissible thrust load	Permissible inertial load	Parallelism	Concentricity	Weight
W	Nm	kgm²	rpm		sec	sec	kgf	Nm	μm	mm	kg
750W 1.0KW	65	9358x10⁻⁶	200	1/18	≦15	±15	500	200	±2	±0.01	14

Contacts:

Mr. R Deep

Mail Id: njitsufa@gmail.com, sales@njitsu.in,

Registered Office: Plot 3, Sector 2B , MET, Jhajjar, Haryana – 124507.

Ex Works: C-40. Kurali, Chandigarh, Punjab

Mobile: +91 955789421

www.njitsu.in